Superior Implant Technology

CATALOG 2018

CONTENT

COMPANY PROFILE 04

OUR DENTAL IMPLANTS ADVANTAGES 06

IMPLANTOLOGY 08

CUSTOM INDIVIDUAL IMPLANTS 16

DENTAL IMPLANTS: 20

- Two-piece implants 22
- Conical platform implants 32
- Narrow platform implants 34
- One piece implants 38

TOOLS: 40

- Drills 42
- Drivers 46
- Professional implantology tools 47
- Surgical kits 48

PROSTHETIC PARTS: 60

STANDARD PLATFORM: 63

- Index chart 64
- Healing caps 66
- Impressions 67
- Cement Retained Restoration 71
- Screw Retained Restoration 85
- Overdenture Restoration 93
- Lab Products 83

CONICAL PLATFROM: 98

- Index chart 99
- Healing caps 100
- Impressions 101
- Cement Retained Restoration 104
- Overdenture Restoration 107

NARROW PLATFROM: 109

- Index chart 110
- Healing caps 112
- Impressions 113
- Cement Retained Restoration 116
- Screw Retained Restoration 124
- Overdenture Restoration 128
- Lab Products 122

BONE GRAFTS & ACCESSORIES: 133

- Bone graft & membrane 134
- ABPhysio - Motor system for implantology 138
- TLJ – Transparent lower jaw 140

INDEX 142

COMPANY PROFILE

A.B. Dental is a dynamic and innovative service-based company providing the dentist a complete solution, which includes computerized implant planning and custom individual implants using laser-sintering technology.

With top-of-the-line technology and extensive industry experience, we specialize in the development, manufacturing and marketing of dental implants, prosthetic products and surgical tools.

A.B. DENTAL OFFERS A UNIQUE MODEL TO THE MARKET WHICH PROVIDES THE DENTIST WITH A COMPLETE END TO END SOLUTION.

- Computerized implant planning
- 3D printing of surgical guides
- Custom individual implants using laser-sintering technology
- A wide range of implants, prosthetic products, tools, accessories and CAD/CAM solutions required for the dentist to perform an accurate and successful treatment
- In-house training center fully equipped for lectures and hands-on training.

A.B. Dental adheres to the highest international standards and has obtained approvals from regulatory agencies in multiple countries: FDA (USA), CE (Europe), Russia Federation, AMAR (Israel), Chinese FDA, India FDA, Taiwan FDA, Australian TGA, Ukraine and more.

WITH A MISSION TO LEAD THE MARKET WITH THE NEXT GENERATION OF SMART DENTAL TECHNOLOGY AND SOLUTIONS, WE PROVIDE MORE THAN JUST SERVICES - WE HOLD OURSELVES TO HIGHER STANDARDS OF CARE.

Continuous Innovation: Never content to simply create when we can lead the way, we constantly improve and expand our innovative line of products, offering breakthrough technology that goes beyond addressing today's market needs to provide visionary and enhanced solutions.
Patents, products, and tailor-made solutions: Unique patented smart solutions give you an edge in the market. Our large portfolio of products allows for diversified solutions.
The combination of creativity, unparalleled R&D, and our unique marketing model enables us to provide a swift response to adapt to changing needs in the relevant markets.
Advisory Board - A.B.'s advisory board covers all aspects of dentistry and includes renowned researchers from leading universities, equipping A.B. to foresee and address all dental needs and perspectives.
Advanced Training Center: We provide on-going training for all our dentists and dental technicians to ensure excellence and continued development.
Human resource: We know that the right staff is the foundation of any successful company. Investment in client interaction and satisfaction is as pivotal as technology.

OUR DENTAL IMPLANTS ADVANTAGES

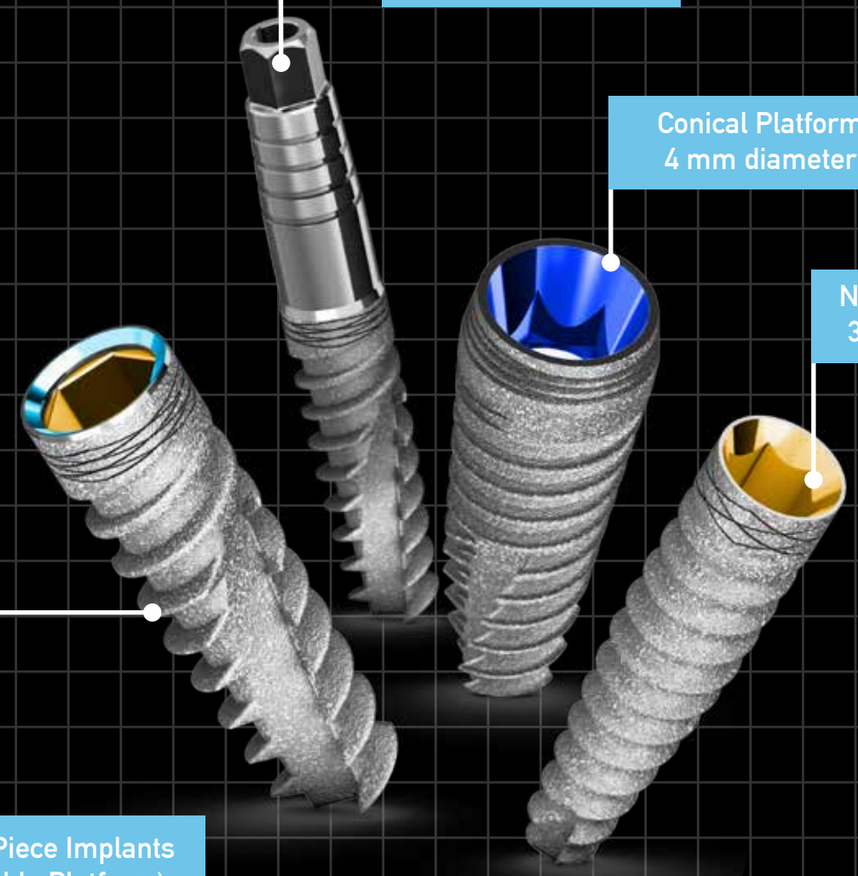

A WIDE RANGE OF DENTAL IMPLANTS FOR ALL PLATFORMS AND SIZES (SHORT/LONG/WIDE), EACH ONE HAS A UNIQUE DESIGN TO MEET THE REQUIREMENTS OF EACH DENTIST AND PATIENT.

PLATFORM SWITCHING:

Restoration of implants with diameter-reduced abutments, for improved preservation of crestal bone levels and increasing the soft tissue volume contributes to long-term esthetic outcomes.

BIOLOGICAL SURFACE:

The implant undergoes special blasting with calcium phosphate for surface roughening and enhanced osseointegration.

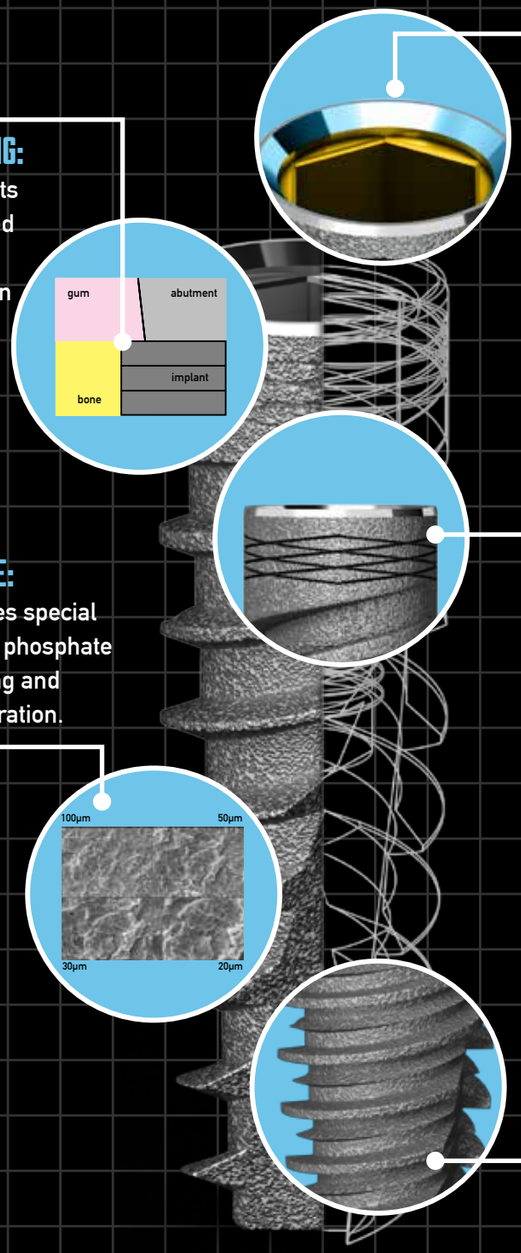

DOUBLE PLATFORM:

The implants are designed to accommodate two restorative platforms: Deep connection (Internal Hexagon 1.8 mm), suitable for all abutments with antirotational hexagon.
Flat connection (0.2 mm), designed for non-engaging abutments (Non hexagon).

NECK RINGS:

For improving bone to implant connection at the crestal zone.

TWO THREADS:

Flat thread that enables the strongest initial stability.
Sharp thread that enables the insertion of the implant easily and with minimal trauma to the bone

IMPLANTOLOGY

MATERIAL

All A.B. Dental implants are made of titanium alloy Ti-6Al-4V ELI in accordance with ASTM-F136-02 standard specification.
Titanium is a proven ideal implant material, mainly due to its ability to integrate almost completely with the bone. In addition to being "bio-friendly", it provides favorable mechanical qualities (strength, endurance) and can be precisely fabricated (precision measured in microns) to ensure a range of implants that meet the requirements for optimizing stability in the widest range of patients (considering the dimensions and state of health of an individuals' bone and gums).

BIOLOGICAL SURFACE

A.B. Dental implants undergoes a special treatment of Biological blasting with calcium phosphate for surface roughening, to enhance the direct attachment of the bone to the implant (Osseointegration), as supported by the following quote from an article that compared different surface treatments:
"As the implant surface is the first part of the device to contact the host's biological fluids, it is expected that its properties will affect the early healing between host and implant" (Albrektsson & Wennenberg, 2004).

"Over the years, implant surfaces have evolved from smooth as-turned surfaces towards textured surfaces. Surface texturization may be achieved through a series of methods such as acid-etching, grit-blasting, anodizing, and others" (Albrektsson & Wennenberg; Coelho et al., 2009). "However, concerns regarding the final surface biocompatibility have been expressed" (Lemons, 2004).
"The new biological surface, offered by A.B. Dental, combines all the technological innovations within one surface resulting in biological advantages.
The wide particle range bioactive ceramic media blasting with mild gradative multi-step cleaning assures a moderately rough surface (Figures 1 and 2) along with a highly biocompatible surface chemistry where only Osseo conductive and biocompatible elements can be detected" (Figure 3). (Albrektsson & Wennenberg, 2004).

REFERENCES:

- Albrektsson T, Wennerberg A. Oral implant surfaces: Part 1-review focusing on topographic and chemical properties of different surfaces and in vivo responses to them. Int J Prosthodont 2004;17(5):536-43.
- Coelho PG, Granjeiro JM, Romanos GE, Suzuki M, Silva NR, Cardaropoli G, Thompson VP, Lemons JE. Basic research methods and current trends of dental implant surfaces. J Biomed Mater Res B Appl Biomater 2009;88(2):579-96.
- Lemons JE Biomaterials, biomechanics, tissue healing, and immediate-function dental implants. J Oral Implantol 2004;30(5):318-24.

Figure 1:
Scanning electron micrographs of the biological surface. The bioactive ceramic media blasting with mild gradative multi-step cleaning assures a moderately rough surface. The surface treatment results in surface texturization in the micrometer and nanometer level, maximizing the interaction between surface and biological fluids immediately after implantation, and load bearing capability after Osseo integration establishment.

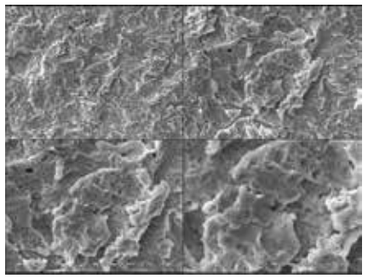

Figure 2:
Representative three-dimensional topographical reconstruction showing texturization at the micrometer and the nanometer level.

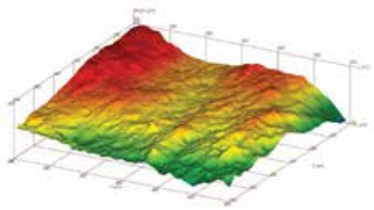

Figure 3:
Surface specific spectroscopy detecting only the elements of the implant with no contamination.

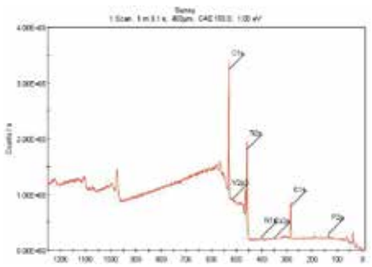

CUSTOM INDIVIDUAL IMPLANTS

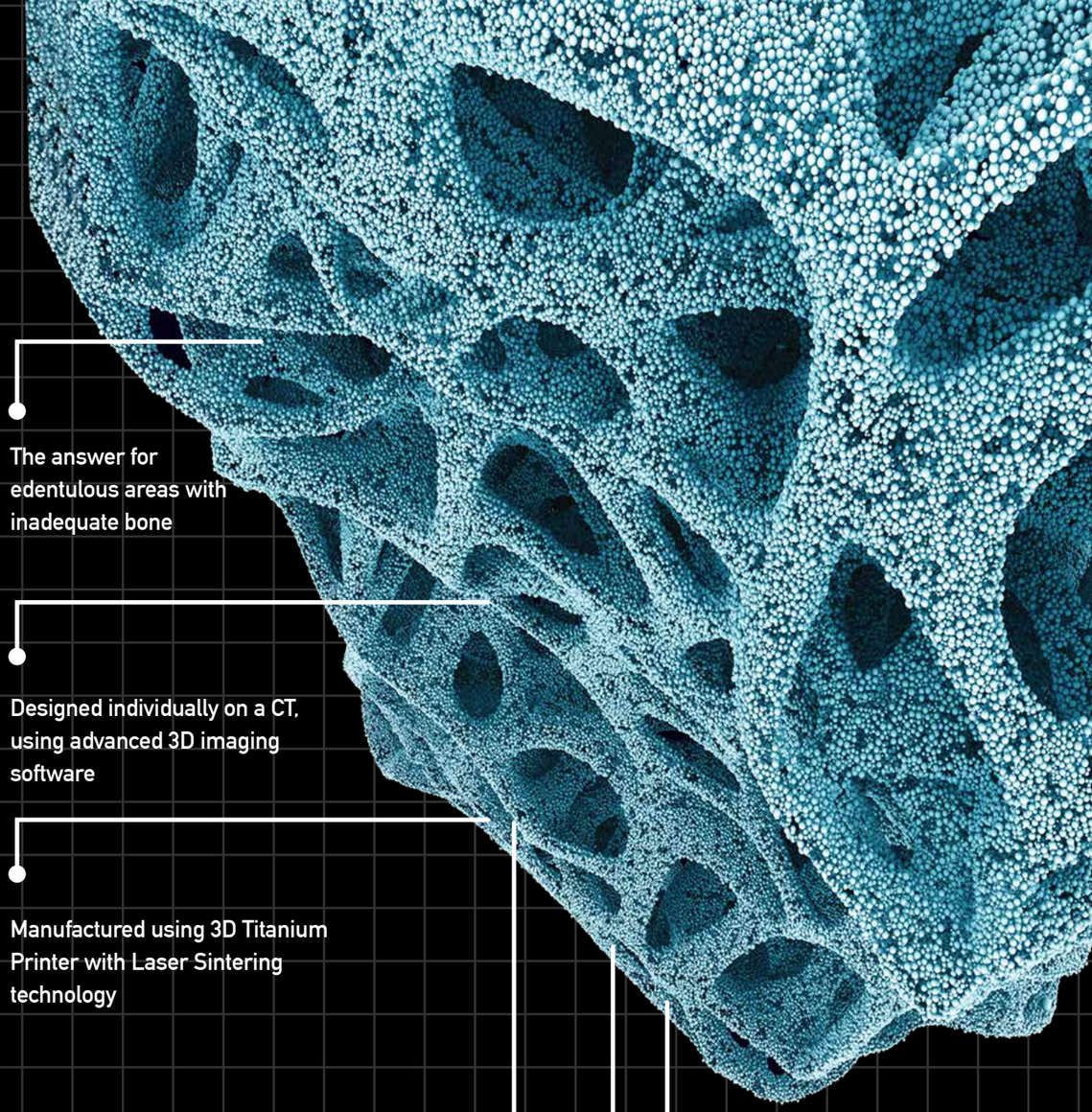

The answer for edentulous areas with inadequate bone

Designed individually on a CT, using advanced 3D imaging software

Manufactured using 3D Titanium Printer with Laser Sintering technology

Higher hydrophilic

Unique micro-Nano surface

Enhanced osseointegration

CUSTOM INDIVIDUAL IMPLANTS

3D LASER PRINTED CUSTOMIZED IMPLANT

A unique solution that uses 3D laser printed technology combined with ABGUIDEDSERVICE, computerized planning system, to design an implant for an individual case.

GENERAL INFORMATION

There are situations where conventional implants cannot provide a solution.
A.B. Dental's Customized Implants are the answer for edentulous areas with inadequate bone.
Each implant is designed individually on a CT, using advanced 3D imaging software, and manufactured using 3D Titanium Printer with Laser Sintering technology.
The implant surface is similar to a standard implant, to achieve osteo-integration with the bone surface. The abutment positions are planned relating to the future prosthetic restoration.

Individually designed Custom Implants are also used in Maxillo-facial surgeries to restore partial or full jaws in cases of traumatic injuries, or removal of tumours or lesions.
These advanced surgeries are more predictable and take less time.

JAW RESTORATION

INDIVIDUALLY DESIGNED SPLINTING APPLIANCE

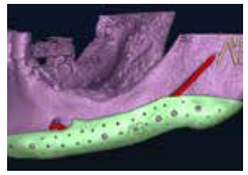

INDIVIDUALLY DESIGNED SUB-PERIOSTEAL IMPLANTS

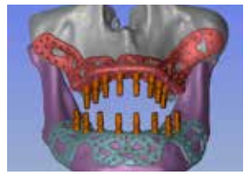

INDIVIDUALLY DESIGNED SUB-PERIOSTEAL IMPLANT – RIGHT MANDIBLE

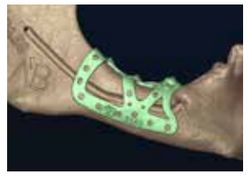

CRANIAL RECONSTRUCTION

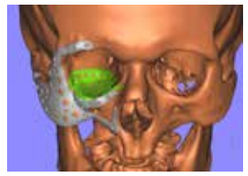

DENTAL IMPLANTS

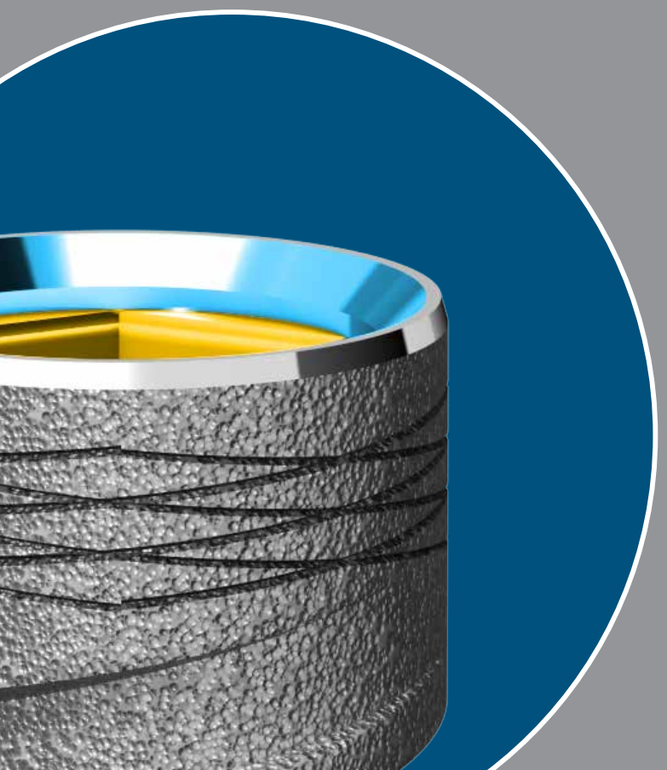

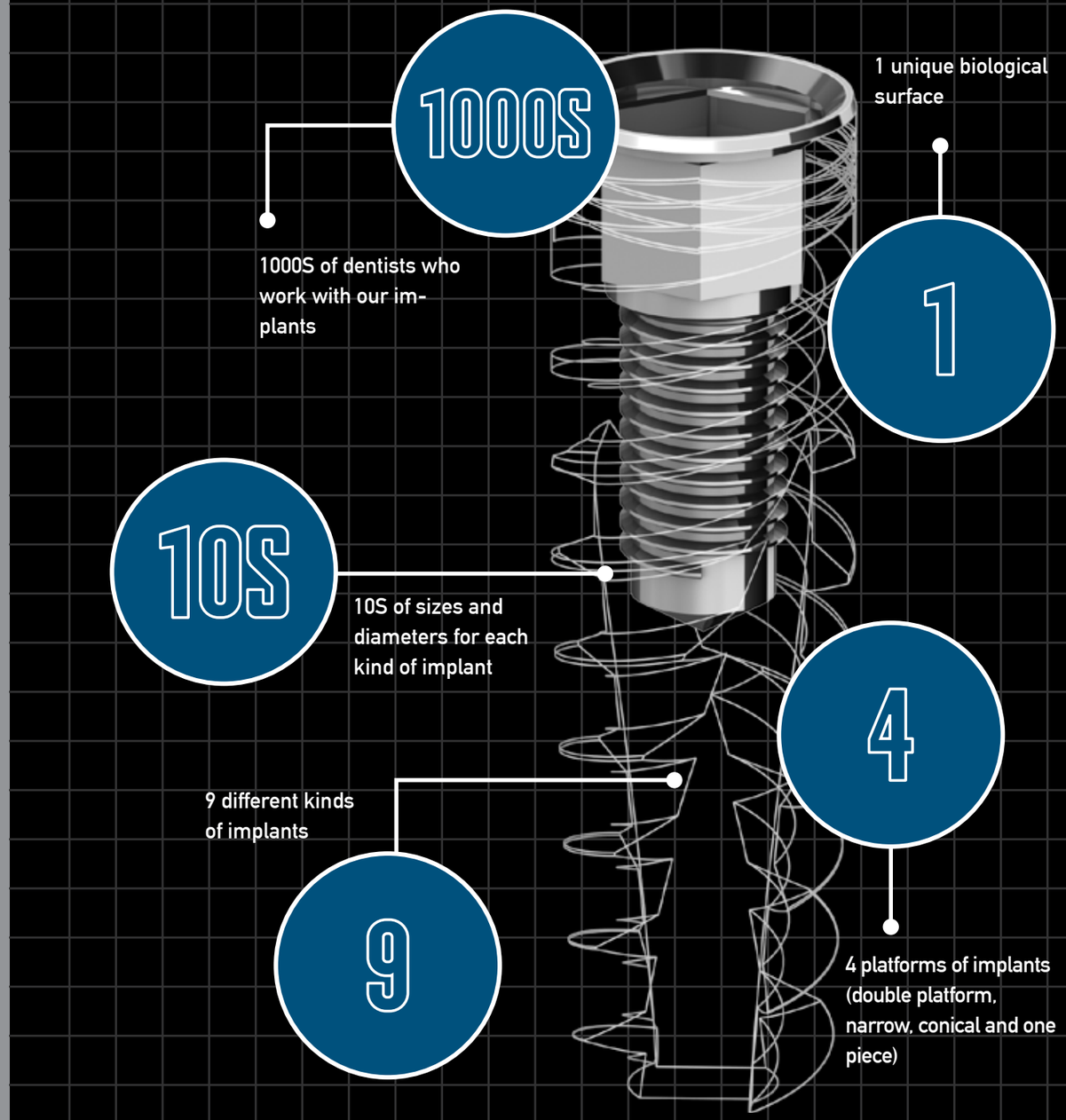

I2 SCREW TYPE IMPLANT

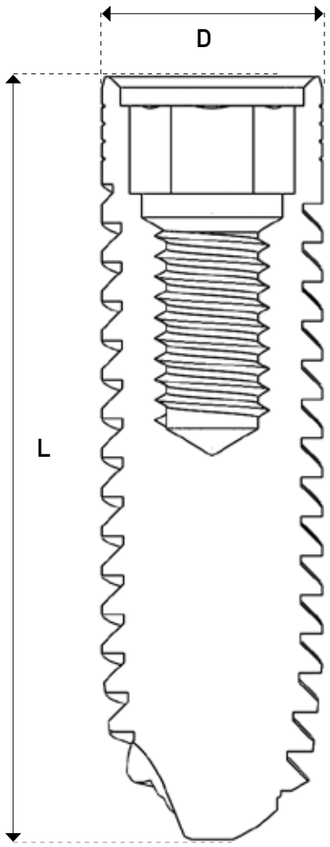

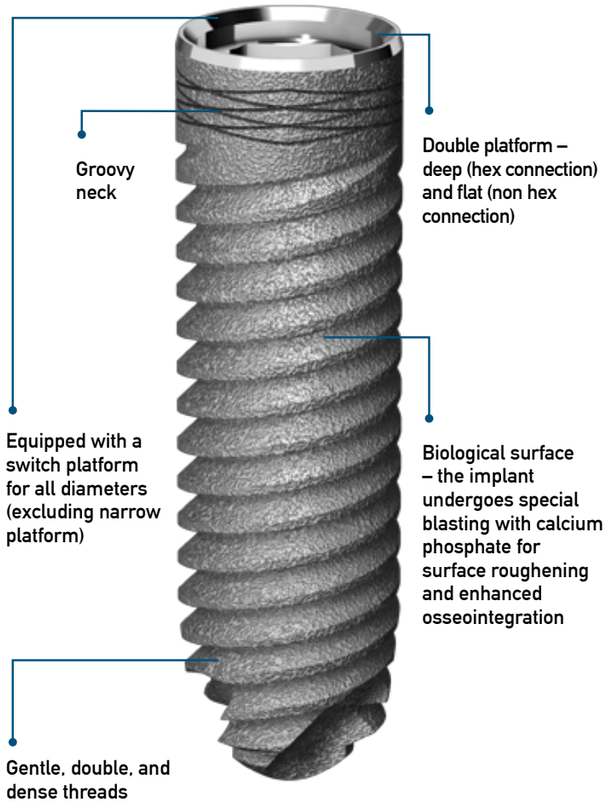

CAT no.	D (mm)	Platform	L (mm)	Tube top colors (indicating the final drill color)
I2	3.5	Standard	8, 10, 11.5, 13, 16	●
I2	3.75	Standard	8, 10, 11.5, 13, 16	●
I2	4.2	Standard	8, 10, 11.5, 13, 16	●
I2	4.5	Standard	8, 10, 11.5, 13, 16	●
I2	5	Standard	8, 10, 11.5, 13, 16	○
I2	6	Standard	8, 10, 11.5	●

FINAL DRILL PROTOCOL

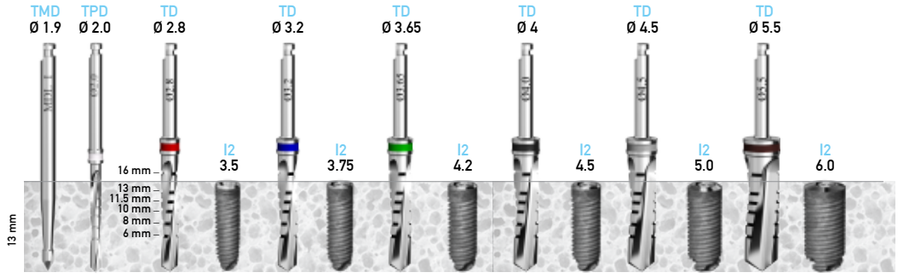

Drill Speed (RPM)	1200-1500	900-1200	800-1000	500-700	400-700	400-600	400-600	300-500	300-500	200-400	200-400
Drill Diameter (mm)	1.9	2	2.5	2.8	3.2	3.65	4	4.2	4.5	5	5.5

TMD - Marker drill bit | TD – Straight drill bit | TPD - Pilot twist drill bit

Procedure recommended by AB Dental should not replace the dentist/surgeon's judgment and experience.

PACKAGE CONTENT

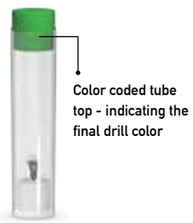

Outside tube

Inside tube

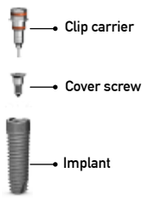

components

I22 SCREW TYPE IMPLANT

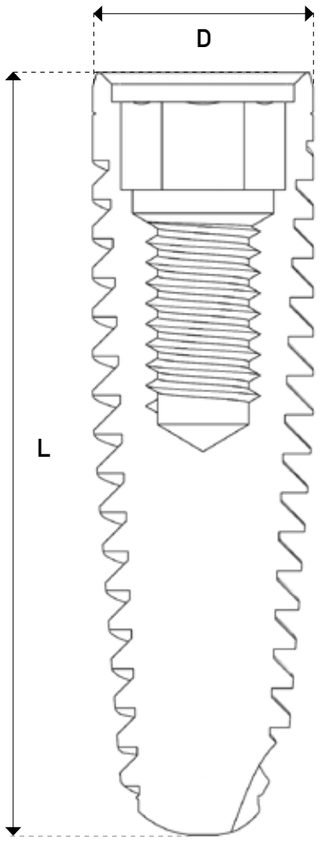

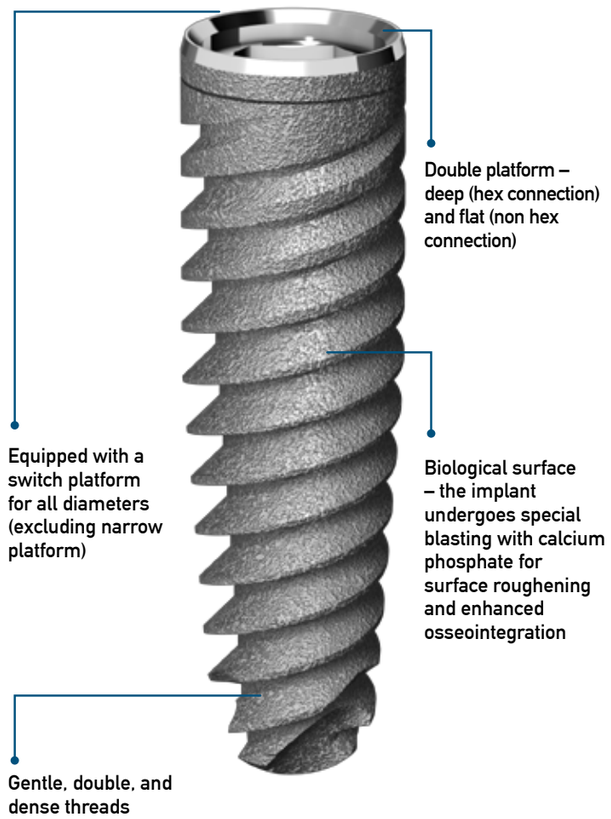

CAT no.	D (mm)	Platform	L (mm)	Tube top colors (indicating the final drill color)
I22	3.75	Standard	8, 10, 11.5, 13, 16	●
I22	4.2	Standard	8, 10, 11.5, 13, 16	●
I22	5	Standard	8, 10, 11.5	○

FINAL DRILL PROTOCOL

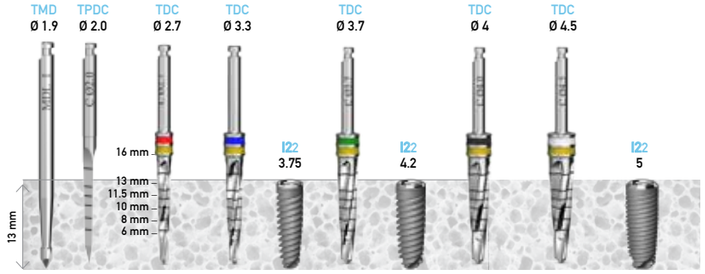

Drill Speed (RPM)	1200-1500	900-1200	800-1000	500-700	400-700	400-600	400-600	300-500	300-500	200-400
Drill Diameter (mm)	1.9	2	2.5	2.8	3.2	3.65	4	4.2	4.5	5

TMD - Marker drill bit | TD – Straight drill bit | TPD - Pilot twist drill bit

Procedure recommended by AB Dental should not replace the dentist/surgeon's judgment and experience.

PACKAGE CONTENT

WITHOUT CARRIER

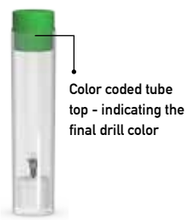

Outside tube

Inside tube

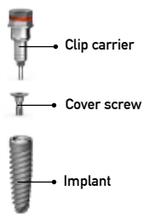

components

Inside tube

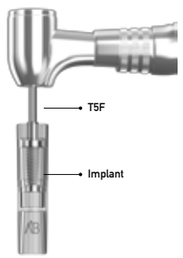

components

I5 CONICAL IMPLANT

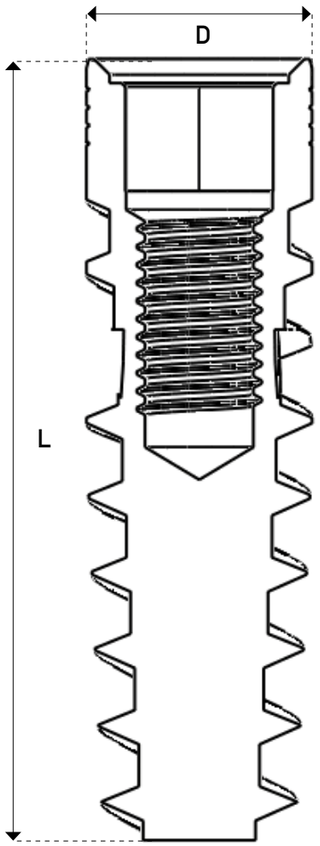

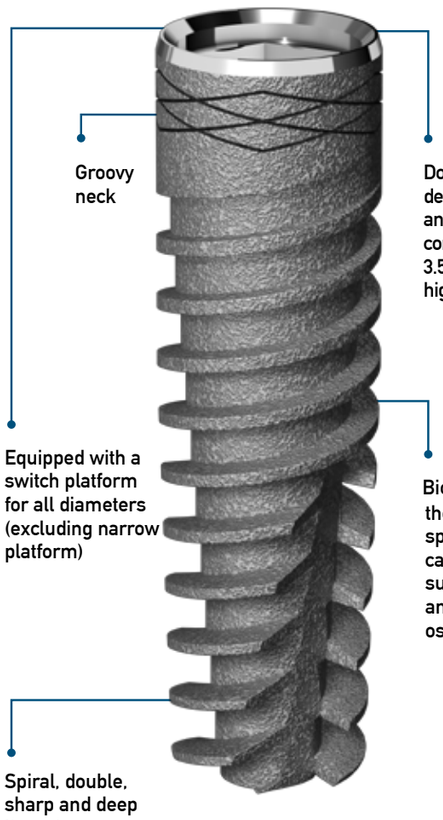

CAT no.	D (mm)	Platform	L (mm)	Tube top colors (indicating the final drill color)
I5	3	Narrow	10, 11.5, 13, 16	○
I5	3.2/ 3.3	Narrow	10, 11.5, 13, 16	●
I5	3.5	Standard	10, 11.5, 13, 16	●
I5	3.75	Standard	8, 10, 11.5, 13, 16	●
I5	4.2	Standard	8, 10, 11.5, 13, 16	●
I5	4.5	Standard	6, 8, 10, 11.5, 13, 16	●
I5	5	Standard	6, 8, 10, 11.5, 13, 16	○
I5	6	Standard	6, 8, 10, 11.5, 13, 16	●

FINAL DRILL PROTOCOL

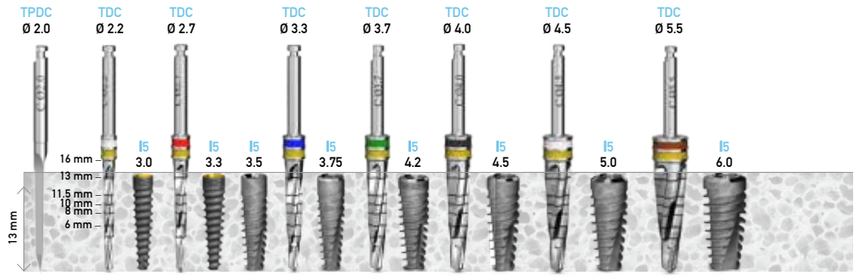

Drill Speed (RPM)	900-1200	500-700	400-700	400-600	400-600	300-500	300-500	200-400
Drill Diameter (mm)	2	2.7	3.3	3.7	4	4.2	4.5	5.5

TDC – Conical drill bit | TDCS – Counter sink | TPDC - Pilot twist conical drill bit

Procedure recommended by AB Dental should not replace the dentist/surgeon's judgment and experience.

PACKAGE CONTENT

WITHOUT CARRIER

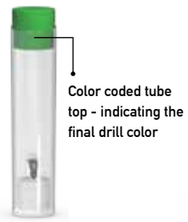

Outside tube

Inside tube

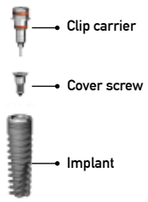

components

Inside tube

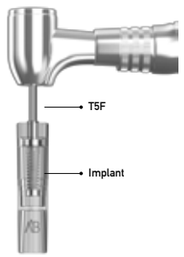

components

OPTIONAL DRILLS

Final drills for dense bone (type I-II)

I55 CONICAL IMPLANT

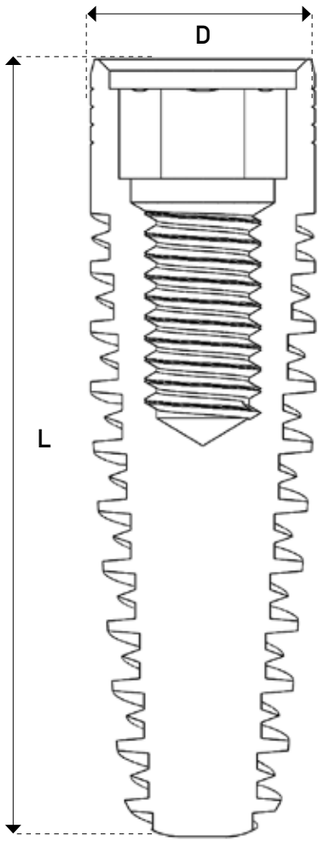

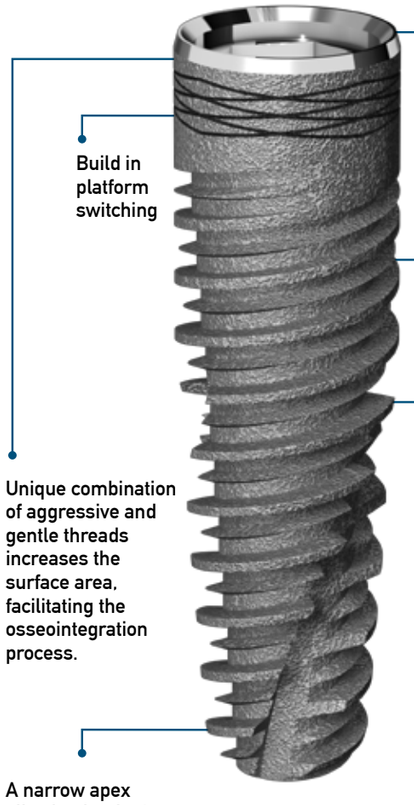

Build in platform switching

The combination of cutting threads allow for minimal insertion trauma.

Universal internal hex (compatibility with all prosthetic parts)

Unique combination of aggressive and gentle threads increases the surface area, facilitating the osseointegration process.

A unique design for immediate loading giving maximum Implant stability.

A narrow apex allowing implant prime stability.

CAT no.	D (mm)	Platform	L (mm)	Tube top colors (indicating the final drill color)
I55	3	Narrow	10, 11.5, 13, 16	○
I55	3.3	Narrow	10, 11.5, 13, 16	●
I55	3.75	Standard	8, 10, 11.5, 13, 16	●
I55	4.2	Standard	8, 10, 11.5, 13, 16	●
I55	4.5	Standard	6, 8, 10, 11.5, 13, 16	●
I55	5	Standard	6, 8, 10, 11.5, 13, 16	○

FINAL DRILL PROTOCOL

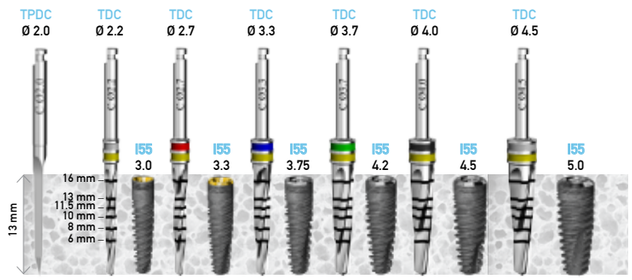

Drill Speed (RPM)	900-1200	500-700	400-700	400-600	400-600	300-500	300-500	200-400
Drill Diameter (mm)	2	2.7	3.3	3.7	4	4.2	4.5	5.5

TDC – Conical drill bit | TDCS – Counter sink | TPDC - Pilot twist conical drill bit

Procedure recommended by AB Dental should not replace the dentist/surgeon's judgment and experience.

PACKAGE CONTENT

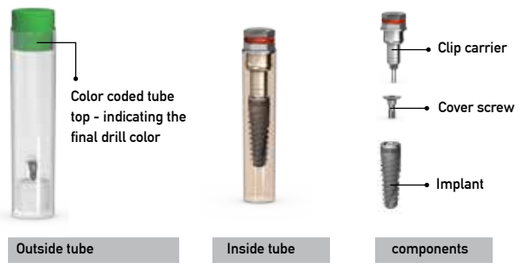

OPTIONAL DRILLS

Final drills for dense bone (type I-II)

I10 TRAPEZE IMPLANT

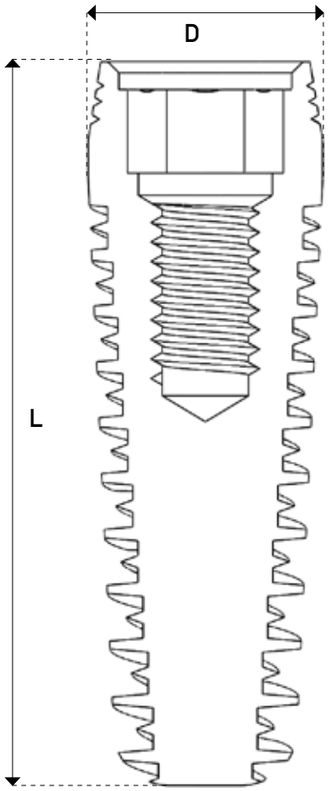

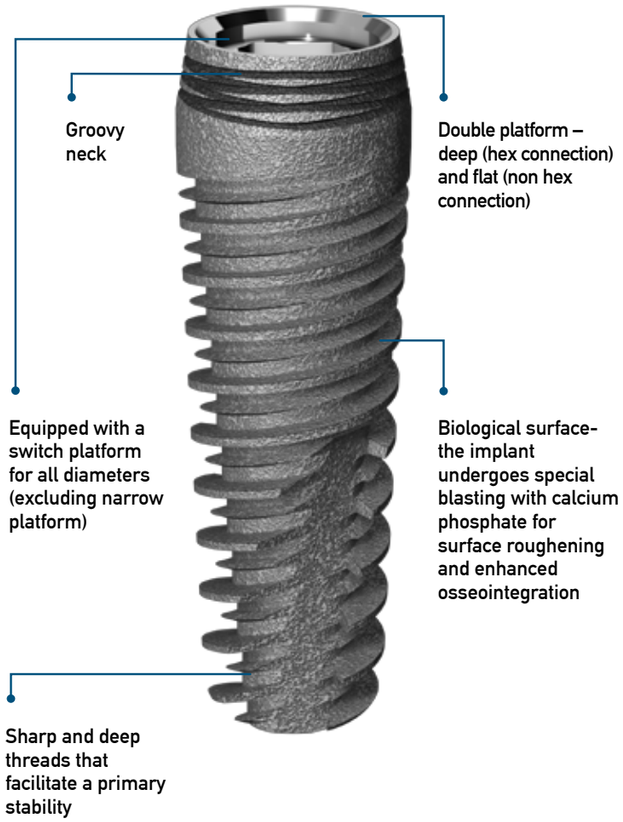

CAT no.	D (mm)	Platform	L (mm)	Tube top colors (indicating the final drill color)
I10	3.75	Narrow	8, 10, 11.5, 13, 16	●
I10	4.2	Standard	8, 10, 11.5, 13, 16	●
I10	5	Standard	8, 10, 11.5, 13	○

FINAL DRILL PROTOCOL

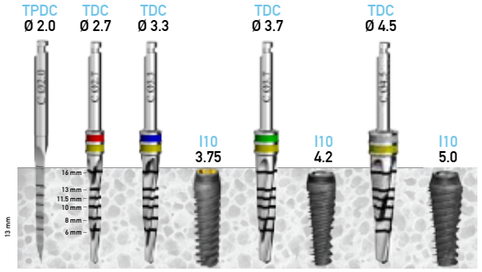

Drill Speed (RPM)	900-1200	800-1000	500-700	400-700	400-600	400-600	300-500	300-500
Drill Diameter (mm)	2	2.2	2.7	3.3	3.7	4	4.2	4.5

TDC – Conical drill bit | TDCS – Counter sink | TPDC - Pilot conical drill bit

Procedure recommended by AB Dental should not replace the dentist/surgeon's judgment and experience.

OPTIONAL DRILLS

Final drills for dense bone (type I-II)

PACKAGE CONTENT

Outside tube

Inside tube

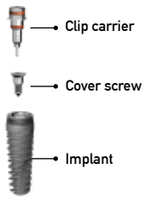

components

I10C TRAPEZE IMPLANT WITH CONICAL PLATFORM

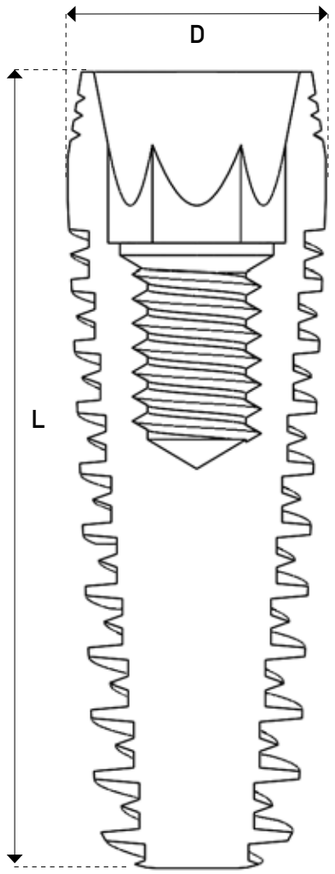

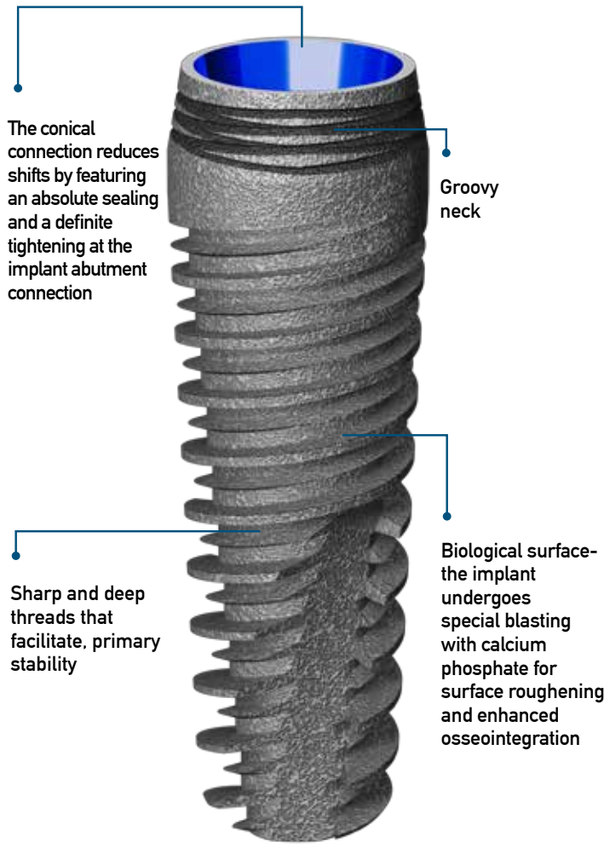

CAT no.	D (mm)	Platform	L (mm)	Tube top colors (indicating the final drill color)
I10C	4.2	Standard	8, 10, 11.5, 13	●

FINAL DRILL PROTOCOL

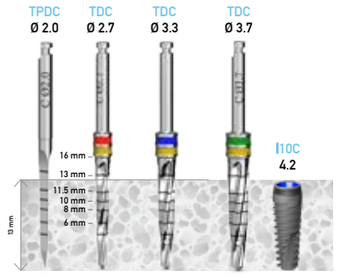

Drill Speed (RPM)	900-1200	800-1000	500-700	400-700	400-600	400-600	300-500
Drill Diameter (mm)	2	2.2	2.7	3.3	3.7	4	4.2

TDC – Conical drill bit | TDCS – Counter sink | TPDC - Pilot conical drill bit

Procedure recommended by AB Dental should not replace the dentist/surgeon's judgment and experience.

OPTIONAL DRILLS

Final drills for dense bone (type I-II)

PACKAGE CONTENT

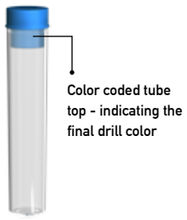

Outside tube

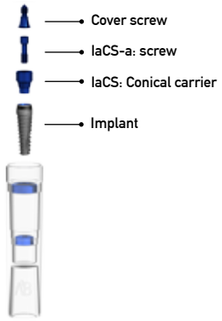

components

I6 NARROW INTEGRAL IMPLANT

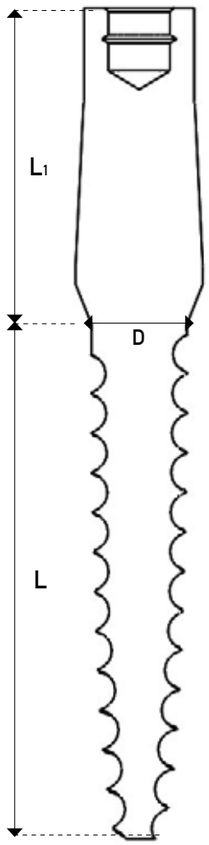

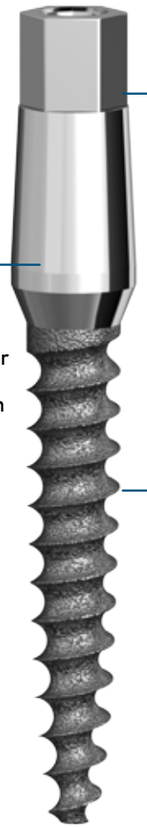

Designed for narrow alveolar ridges with sufficient depth and narrow interdental spaces

One piece conical, narrow, integral implant combined with abutment

Biological surface – the implant undergoes special blasting with calcium phosphate for surface roughening and enhanced osseointegration

CAT no.	D (mm)	Platform	L (mm)	L_1 (mm)	Tube top colors (indicating the final drill color)
I6	2.4	Narrow	11.5, 13, 16	7	○
I6	3	Narrow	10, 11.5, 13, 16	7	○
I6	3.2	Narrow	10, 11.5, 13, 16	7	●

FINAL DRILL PROTOCOL

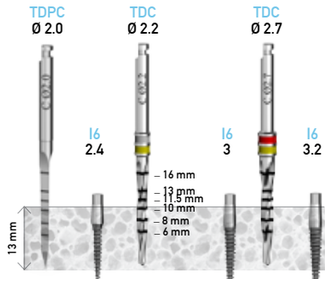

Drill Speed (RPM)	900-1200	800-1000	500-700
Drill Diameter (mm)	2	2.2	2.7

TDC - Conical drill bit | TPDC – Pilot conical drill bit

OPTIONAL DRILLS

For dense bone type: Procedure recommended by AB Dental should not replace the dentist/surgeon's judgment and experience.

PACKAGE CONTENT

Color coded tube top - indicating the final drill color

Outside tube

Inside tube

Integral implant carrier

Implant

components

I6b ONE PIECE BALL ATTACHMENT IMPLANT

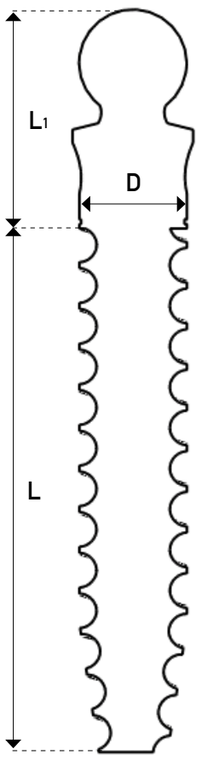

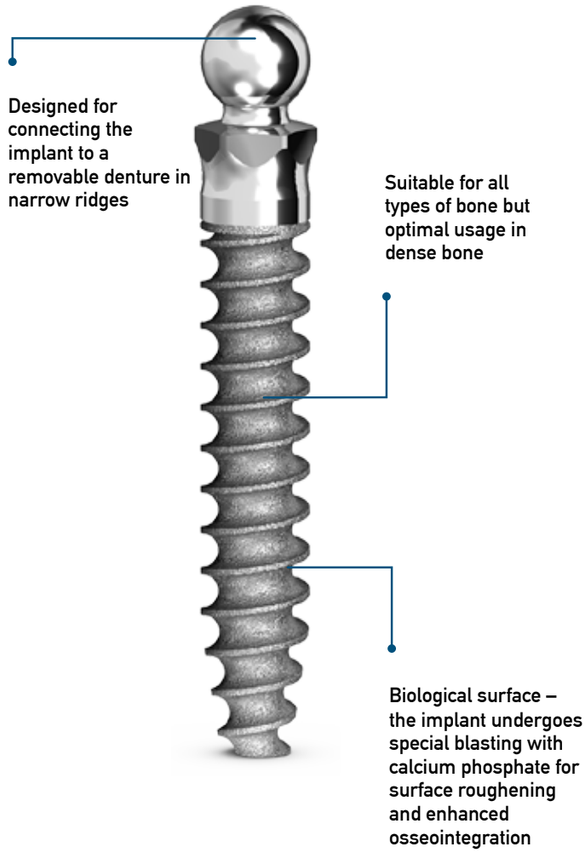

CAT no.	D (mm)	Platform	L (mm)	L_1 (mm)	Tube top colors (indicating the final drill color)
I6b	2.4	Narrow	11.5, 13, 16	6	○

FINAL DRILL PROTOCOL

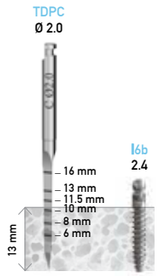

Drill Speed (RPM)	900-1200
Drill Diameter (mm)	2

TPDC – Pilot conical drill bit

OPTIONAL DRILLS

For dense bone type: Procedure recommended by AB Dental should not replace the dentist/surgeon's judgment and experience.

PACKAGE CONTENT

Outside tube

Inside tube

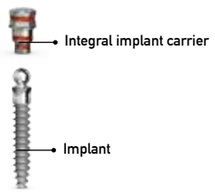

components

I7 INTEGRAL IMPLANT

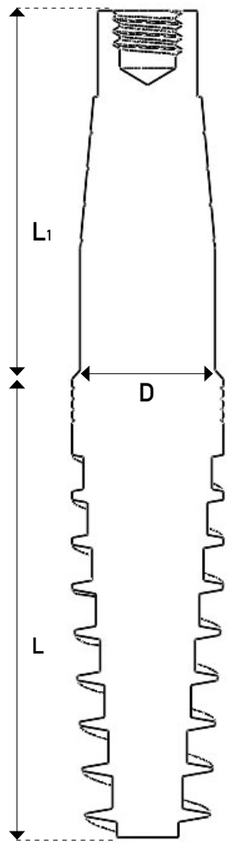

One piece conical implant combined with abutment

The restoration is limited to cement retained concept

Sharp and deep threads that facilitate primary stability

Biological surface – the implant undergoes special blasting with calcium phosphate for surface roughening and enhanced osseointegration

CAT no.	D (mm)	Platform	L (mm)	L_1 (mm)	Tube top colors (indicating the final drill color)
I7	3.75	Standard	8, 10, 11.5, 13, 16	11	●
I7	4.2	Standard	6, 8, 10, 11.5, 13, 16	11	●
I7	5	Standard	6, 8, 10, 11.5, 13	11	○

FINAL DRILL PROTOCOL

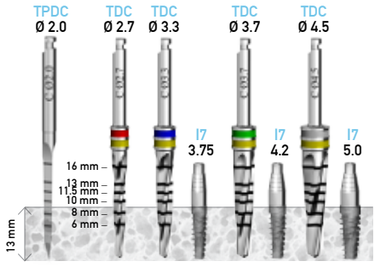

Drill Speed (RPM)	900-1200	500-700	400-700	400-600	400-600	300-500	300-500	200-400
Drill Diameter (mm)	2	2.7	3.3	3.7	4	4.2	4.5	5.5

TDC – Conical drill bit | TDCS – Counter sink | TPDC - Pilot conical drill bit

Procedure recommended by AB Dental should not replace the dentist/surgeon's judgment and experience.

OPTIONAL DRILLS

Final drills for dense bone (type I-II)

PACKAGE CONTENT

Color coded tube's top - indicating the final drill color

Outside tube

Inside tube

Integral implant carrier

Implant

components

TOOLS

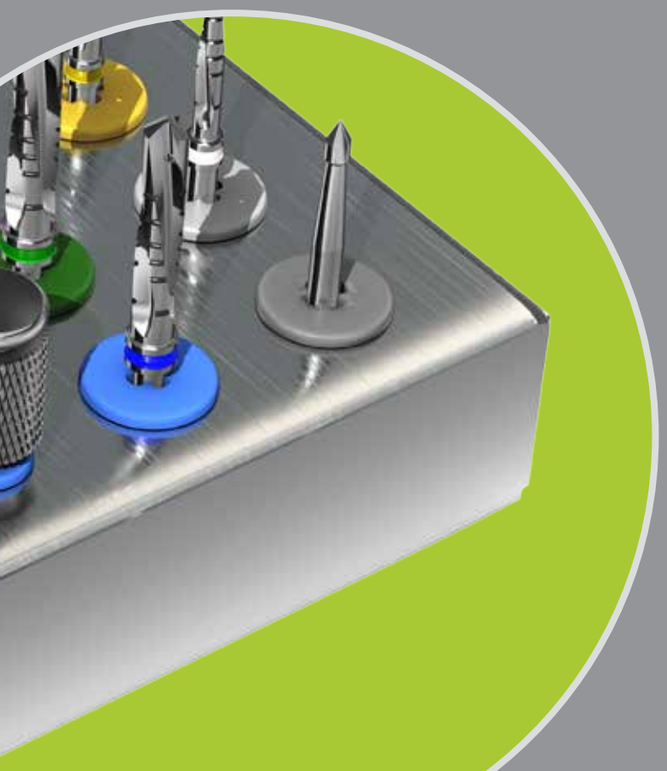

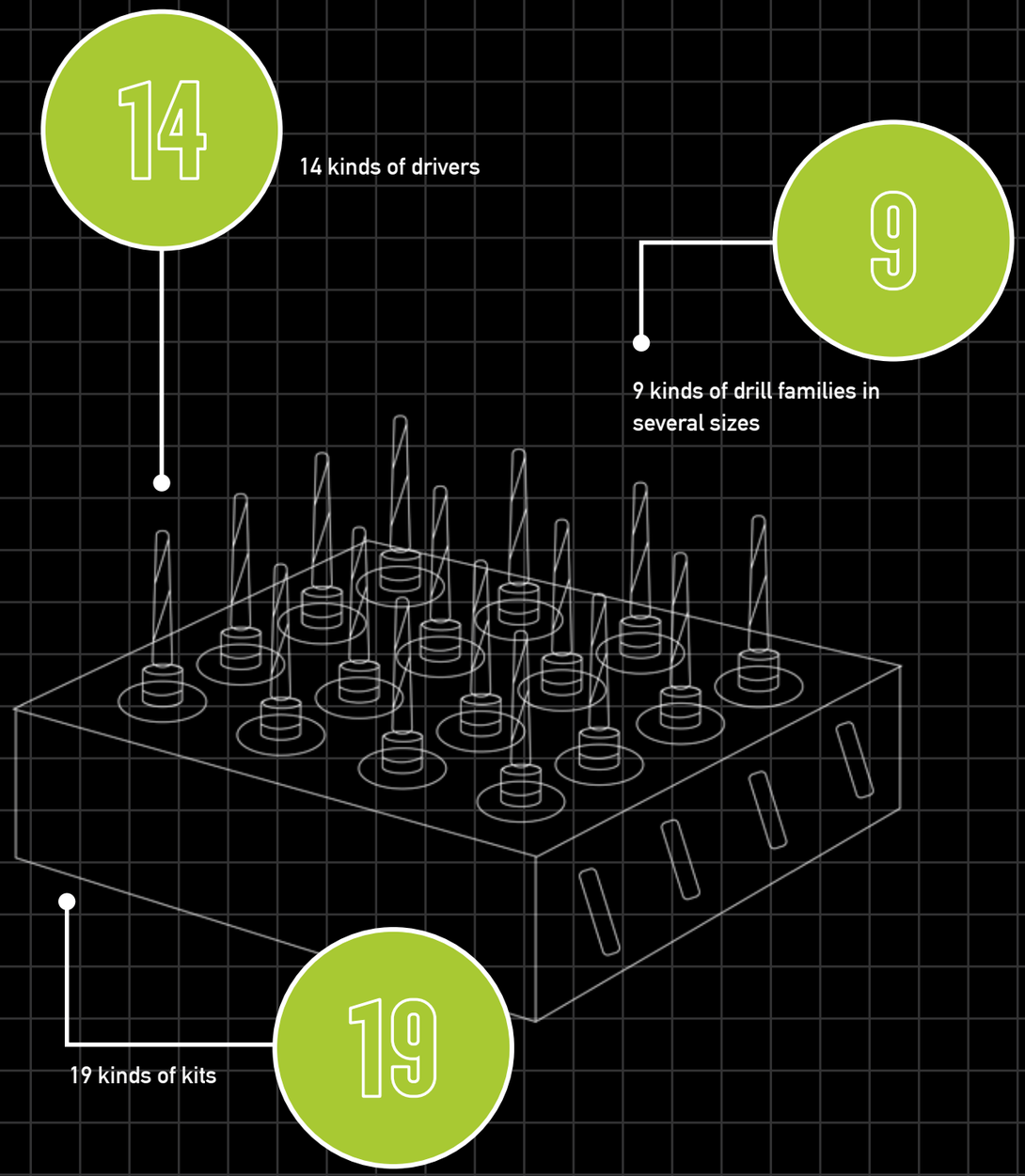
14
14 kinds of drivers
9
9 kinds of drill families in several sizes
19 kinds of kits
19

DRILLS

STRAIGHT DRILLS

TPD-2.0
Pilot Drill Bit

TD-2.5
Drill Bit

TD-2.8
Drill Bit

TD-3.2
Drill Bit

TD-3.65
Drill Bit

TD-4.0
Drill Bit

TD-4.5
Drill Bit

TD-5.0
Drill Bit

TD-5.5
Drill Bit

TD-1.2

TD-1.5

TMD-1.9
Marker Drill Bit

TDE
Drill extension Bit

CONICAL DRILLS

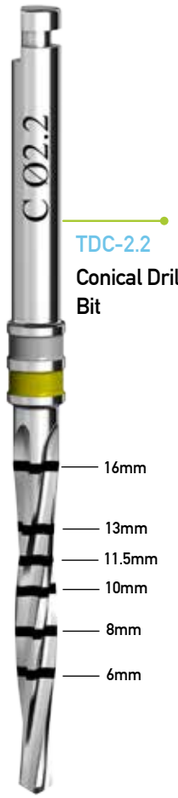

TDC-2.2
Conical Drill Bit

TPDC-2.0
Pilot Conical Drill Bit

TDC-2.7
Conical Drill Bit

TDC-3.3
Conical Drill Bit

TDC-3.7
Conical Drill Bit

TDC-4.0
Conical Drill Bit

TDC-4.5
Conical Drill Bit

TDC-5.5
Conical Drill Bit

DRILLS

COATED DRILLS

TPDD-2.0
Pilot Coated
Drill Bit

TDD-2.5
Coated
drill Bit

TDD-2.8
Coated
drill Bit

TDD-3.2
Coated
drill Bit

TDD-3.65
Coated
drill Bit

TDD-4.0
Coated
drill Bit

COUNTER SINK

TDCS-3.75-4.2
Counter Sink

TDCS-5-6
Counter Sink

TREPHINE

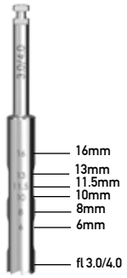

TDTI-3.0
Trephine

TDTI-4.0
Trephine

TDTI-5.0
Trephine

DRIVERS

DRIVERS FOR IMPLANT PLACEMENT

T3-2,9 T3-2,18
Ratchet hex driver for 3mm diameter implant - narrow platform

T3 2.4,9 T3-2.4,18
Ratchet hex driver for 3.75mm diameter implant – standard platform

T3-I6 T3-I6L
Ratchet hex driver for I6\I7 implant

T3C-4,9 T3C-4,18
Ratchet hex driver for 4mm diameter implant – conical platform

DRIVERS TO TIGHTEN ABUTMENTS

T1-1.2,9 T1-1.2,15
Ratchet Hex Driver for Abutment

CONTRA ANGLE DRIVERS

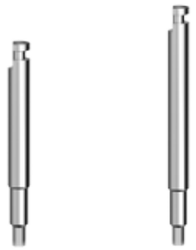

T5-1.2,21 T5-1.2,26
Contra Angle Driver for Abutment

CONTRA ANGLE DRIVERS

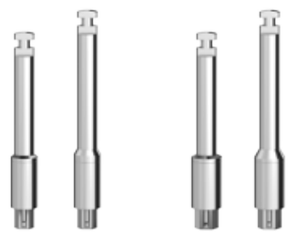

T5F-2,20 T5F-2.4,20
T5F-2,25 T5F-2.4,25
Contra Angle Driver for implant – with friction (for implants without carrier)

HAND DRIVERS TO TIGHTEN ABUTMENTS

T2-1.2,9 T2-1.2,15
Hand Hex Driver for Abutment - with conical ending to prevent screws from falling

RETRIEVING SCREW

T4
Retrieving Screw

PROFESSIONAL IMPLANTOLOGY TOOLS

T8
Ratchet Wrench

T8c-10-40
Ratchet-Torque Combination

T9
Depth Gauge

T10
Handle

T11
Mallet

T13
Technician's Handle

T15 - 3.75
Disposal screw removing instrument kit.
Also available with 3mm diameter

T16
Implant position
In collaboration with Dr. Meir Aviram

T17
Tissue Punch Driver

T18-3.75,9
T18-3.75,18
Implant removing instrument kit

T22
Abutment Gripper

TKS
COMPACT ORGANIZED KIT

Full small kit of drills

Width: 8cm
Length: 10cm
Height: 5cm

This kit is also available as Cat no. TKS-T8C, including Ratchet torque.

T3-2,18
Ratchet Hex Driver for Implant

T3-2.4,9
T3-2.4,18
→ Ratchet Hex Driver for Implant

T1-1.2,9
T1-1.2,15
→ Ratchet Hex Driver for Abutment

T2-1.2,9
T2-1.2,15
→ Hand Hex Driver for Abutment

T5-2.4,25
Contra angle driver for inserting the implant until initial stability

T8
Ratchet Wrench

TP-23
Parallel Pin (x2)

TMD-1.9
ø 1.9 Marker Drill Bit

TPD-2.0
ø 2.0 Pilot Drill Bit

TD-2.5
ø 2.5 Drill Bit

TD-2.8
ø 2.8 Drill Bit

TD-3.2
ø 3.2 Drill Bit

TD-3.65
ø 3.65 Drill Bit

TD-4.0
ø 4.0 Drill Bit

TD-4.5
ø 4.5 Drill Bit

TKSC
COMPACT ORGANIZED CONICAL KIT

Full conical small kit of drills

Width: 8cm
Length: 10cm
Height: 5cm

This kit is also available as Cat no. TKSC-T8C, including Ratchet torque.

TMD-1.9
ø 1.9 Marker Drill Bit

T3-2,18
Ratchet Hex Driver for Implant

T3-2.4,9
T3-2.4,18
→ Ratchet Hex Driver for Implant

T1-1.2,9
T1-1.2,15
→ Ratchet Hex Driver for Abutment

T2-1.2,9
T2-1.2,15
→ Hand Hex Driver for Abutment

T5-2.4,25
Contra angle driver for inserting the implant until initial stability

T8
Ratchet Wrench

TP-23
Parallel Pin (x2)

TPDC-2.0
ø 2 Pilot Conical Drill Bit

TDC-2.2
ø 2.2 Conical Drill Bit

TDC-2.7
ø 2.7 Conical Drill Bit

TDC-3.3
ø 3.3 Conical Drill Bit

TDC-3.7
ø 3.7 Conical Drill Bit

TDC-4.0
ø 4.0 Conical Drill Bit

TDC-4.5
ø 4.5 Conical Drill Bit

TDC-5.5
ø 5.5 Conical Drill Bit

TKM
MEDIUM ORGANIZED KIT

Full medium kit of drills

Width: 14cm
Length: 19cm
Height: 5cm

This kit is also available as Cat no. TKM-T8C, including Ratchet torque combination and counter sinks T8C-10-40, TDCS 3.75-4.2, TDCS-5-6

T3-2,9
T3-2,18
→ Ratchet Hex Driver for Implant

T3-2.4,9
T3-2.4,18
→ Ratchet Hex Driver for Implant

T1-1.2,9
T1-1.2,15
→ Ratchet Hex Driver for Abutment

T2-1.2,9
T2-1.2,15
→ Hand Hex Driver for Abutment

T5-1.2,21
Contra Angle Driver for Abutment

T5-2.4,20
T5-2.4,25
→ Contra angle driver for inserting the implant until initial stability

T8
Ratchet Wrench

TP-23
Parallel Pin (x4)

TMD-1.9
ø 1.9 Marker Drill Bit

TPD-2.0
ø 2.0 Pilot Drill Bit

TD-2.5
ø 2.5 Drill Bit

TD-2.8
ø 2.8 Drill Bit

TD-3.2
ø 3.2 Drill Bit

TD-3.65
ø 3.65 Drill Bit

TD-4.0
ø 4.0 Drill Bit

TD-4.5
ø 4.5 Drill Bit

TD-5
ø 5.0 Drill Bit

TD-5.5
ø 5.5 Drill Bit

TDE
Drilling Extension bit

TKMC
MEDIUM ORGANIZED CONICAL KIT

Full conical medium kit of drills

Width: 14cm
Length: 19cm
Height: 5cm

This kit is also available as Cat no. TKMC-T8C, including Ratchet torque combination and counter sinks T8C-10-40, TDCS 3.75-4.2 TDCS-5-6

T3-2,9
T3-2,18
→ Ratchet Hex Driver for Implant

T3-2.4,9
T3-2.4,18
→ Ratchet Hex Driver for Implant

T1-1.2,9
T1-1.2,15
→ Ratchet Hex Driver for Abutment

T2-1.2,9
T2-1.2,15
→ Hand Hex Driver for Abutment

T5-2.4,20
T5-2.4,25
→ Contra angle driver for inserting the implant until initial stability

T5-1.2,21
Contra Angle Driver for Abutment

T8
Ratchet Wrench

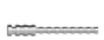

TP-23
Parallel Pin (x4)

TMD-1.9
ø 1.9 Marker Drill Bit

TPDC-2.0
ø 2 Pilot Conical Drill Bit

TDC-2.2
ø 2.2 Conical Drill Bit

TDC-2.7
ø 2.7 Conical Drill Bit

TDC-3.3
ø 3.3 Conical Drill Bit

TDC-3.7
ø 3.7 Conical Drill Bit

TDC-4.0
ø 4.0 Conical Drill Bit

TDC-4.5
ø 4.5 Conical Drill Bit

TDC-5.0
ø 5.0 Conical Drill Bit

TDC-5.5
ø 5.5 Conical Drill Bit

TDE
Drilling Extension Bit

TKD
STOPPERED DRILL KIT

Full stoppered drills kit

Width: 8cm
Length: 10cm
Height: 5cm

TDSt-2,6 Diameter 2mm Length 6mm

TDSt-2,8 Diameter 2mm Length 8mm

TDSt-2,10 Diameter 2mm Length 10mm

TDSt-2,11.5 Diameter 2mm Length 11.5mm

TDSt-2,13 Diameter 2mm Length 13mm

TDSt-2.8,6 Diameter 2.8mm Length 6mm

TDSt-2.8,8 Diameter 2.8mm Length 8mm

TDSt-2.8,10 Diameter 2.8mm Length 10mm

TDSt-2.8,11.5 Diameter 2.8mm Length 11.5mm

TDSt-2.8,13 Diameter 2.8mm Length 13mm

TDSt-3.2,6 Diameter 3.2mm Length 6mm

TDSt-3.2,8 Diameter 3.2mm Length 8mm

TDSt-3.2,10 Diameter 3.2mm Length 10mm

TDSt-3.2,11.5 Diameter 3.2mm Length 11.5mm

TDSt-3.2,13 Diameter 3.2mm Length 13mm

TDSt-3.65,6 Diameter 3.65mm Length 6mm

TDSt-3.65,8 Diameter 3.65mm Length 8mm

TDSt-3.65,10 Diameter 3.65mm Length 10mm

TDSt-3.65,11.5 Diameter 3.65mm Length 11.5mm

TDSt-3.65,13 Diameter 3.65mm Length 13mm

TDSt-4,6 Diameter 4mm Length 6mm

TDSt-4,8 Diameter 4mm Length 8mm

TDSt-4,10 Diameter 4mm Length 10mm

TDSt-4,11.5 Diameter 4mm Length 11.5mm

TDSt-4,13 Diameter 4mm Length 13mm

TDSt-4.5,6 Diameter 4.5mm Length 6mm

TDSt-4.5,8 Diameter 4.5mm Length 8mm

TDSt-4.5,10 Diameter 4.5mm Length 10mm

TDSt-4.5,11.5 Diameter 4.5mm Length 11.5mm

TDSt-4.5,13 Diameter 4.5mm Length 13mm

TKDC
STOPPERED CONICAL DRILL KIT

Full stoppered conical drills kit

Width: 8cm
Length: 10cm
Height: 5cm

TDCSt-2.2,6
Conical Stopper Drill

TDCSt-2.2,8
Conical Stopper Drill

TDCSt-2.2,10
Conical Stopper Drill

TDCSt-2.2,11.5
Conical Stopper Drill

TDCSt-2.2,13
Conical Stopper Drill

TDCSt-2.7,6
Conical Stopper Drill

TDCSt-2.7,8
Conical Stopper Drill

TDCSt-2.7,10
Conical Stopper Drill

TDCSt-2.7,11.5
Conical Stopper Drill

TDCSt-2.7,13
Conical Stopper Drill

TDCSt-3.3,6
Conical Stopper Drill

TDCSt-3.3,8
Conical Stopper Drill

TDCSt-3.3,10
Conical Stopper Drill

TDCSt-3.3,11.5
Conical Stopper Drill

TDCSt-3.3,13
Conical Stopper Drill

TDCSt-3.7,6
Conical Stopper Drill

TDCSt-3.7,8
Conical Stopper Drill

TDCSt-3.7,10
Conical Stopper Drill

TDCSt-3.7,11.5
Conical Stopper Drill

TDCSt-3.7,13
Conical Stopper Drill

TDCSt-4.0,6
Conical Stopper Drill

TDCSt-4.0,8
Conical Stopper Drill

TDCSt-4.0,10
Conical Stopper Drill

TDCSt-4.0,11.5
Conical Stopper Drill

TDCSt-4.0,13
Conical Stopper Drill

TDCSt-4.5,6
Conical Stopper Drill

TDCSt-4.5,8
Conical Stopper Drill

TDCSt-4.5,10
Conical Stopper Drill

TDCSt-4.5,11.5
Conical Stopper Drill

TDCSt-4.5,13
Conical Stopper Drill

TKD-GUIDED

GUIDED SURGICAL KIT

OPTIONAL COMPONENTS

FS-13
Fixation Screw Short

FS-19
Fixation Screw Long

TDG-2,17
Guide Drill Bit

TDG-2,21
Guide Drill Bit

TDG-2,25
Guide Drill Bit

TDG-2,30
Guide Drill Bit

TH- 2.0
Handle - Diameter 2.0mm

TDG-2,17
Guide Drill Bit

TDG-2,21
Guide Drill Bit

TDG-2,25
Guide Drill Bit

TDG-2,30
Guide Drill Bit

TH- 2.5
Handle - Drill Tool Diameter 2.5mm

TDG-2,17
Guide Drill Bit

TDG-2,21
Guide Drill Bit

TDG-2,25
Guide Drill Bit

TDG-2,30
Guide Drill Bit

TH- 2.8
Handle - Drill Tool Diameter 2.8mm

TDG-3,2,17
Guide Drill Bit

TDG-3,2,21
Guide Drill Bit

TDG-3,2,25
Guide Drill Bit

TDG-3,2,30
Guide Drill Bit

TH- 3.2
Handle - Drill Tool Diameter 3.2mm

TDG-1,5,19

TDG-3,65,17
Guide Drill Bit

TDG-3,65,21
Guide Drill Bit

TDG-3,65,25
Guide Drill Bit

TDG-3,65,30
Guide Drill Bit

TH- 3.65
Handle - Drill Tool Diameter 3.65mm

TP- 1.5,31
Fixation Pin (x3)

TD-T17
Ø4.35 Punch to cut gingival tissue

T3G-2,4,30-G
Driver for installing the implant thru ABGuide

T3G-2,4,25-B
Driver for installing the implant thru ABGuide

T3G-2,4,21-Y
Driver for installing the implant thru ABGuide

T3G-2,4,17-R
Driver for installing the implant thru ABGuide

T3G-2,30-G
Driver for installing the implant thru ABGuide

T3G-2,25-B
Driver for installing the implant thru ABGuide

T3G-2,21-Y
Driver for installing the implant thru ABGuide

T3G-2,17-R
Driver for installing the implant thru ABGuide

T9
Depth Gauge

T8
Ratchet Wrench

T2-1,2,15
Hand Hex Driver for Abutment

TKSinus
SINUS LIFT KIT

Width: 17cm
Length: 23cm
Height: 4cm

This sinus kit includes spoons of various angles for lifting the sinus membrane during open sinus lift procedure.

TSINUS-0
Light Blue Sinus Lift Instrument

TSINUS-1
Green Sinus Lift Instrument

TSINUS-2
Red Sinus Lift Instrument

TSINUS-3
Black Sinus Lift Instrument

TSINUS-4
Silver Sinus Lift Instrument

TSINUS-5
Pink Sinus Lift Instrument

TSINUS-6
Purple Sinus Lift Instrument

TSINUS-7
Gold Sinus Lift Instrument

TKOsteo/TKAOsteo
OSTEOTOMES KIT- STRAIGHT/ANGULAR

Width: 17cm
Length: 23cm
Height: 4cm

The osteotome is a device for lifting the sinus membrane during closed sinus lift procedure. This osteotomes kit offers these devices as straight or angular instruments in various diameters.

T-OSTA-2-2.8
Angular Osteotome

T-OSTA-2.8-3.2
Angular Osteotome

T-OSTA-3.2-3.6
Angular Osteotome

T-OSTA-3.6-4.3
Angular Osteotome

T-OSTA-4.3-4.8
Angular Osteotome

PROSTHETIC PARTS

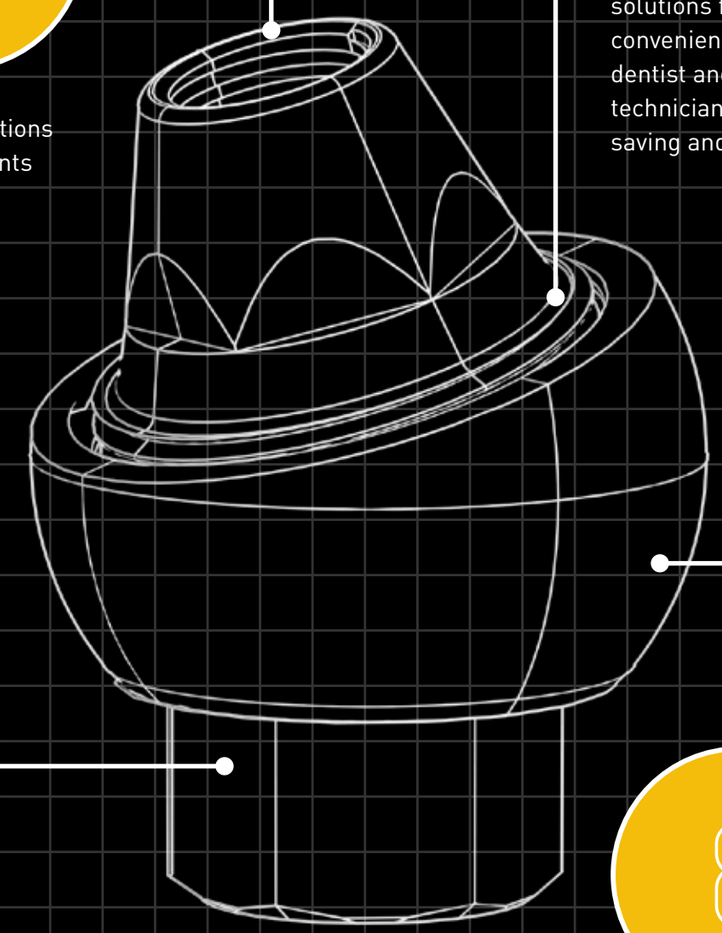

60

prosthetic solutions for tilted implants

105

of sizes, diameters, degrees etc. of solutions for the convenience of the dentist and the technician's time saving and efficiency

3

kinds of restoration methods (cement-retained, screw-retained and overdenture)

8

international registered patents in the prosthodontics field

STANDARD PLATFORM

Designed for implants with
3.5mm and above

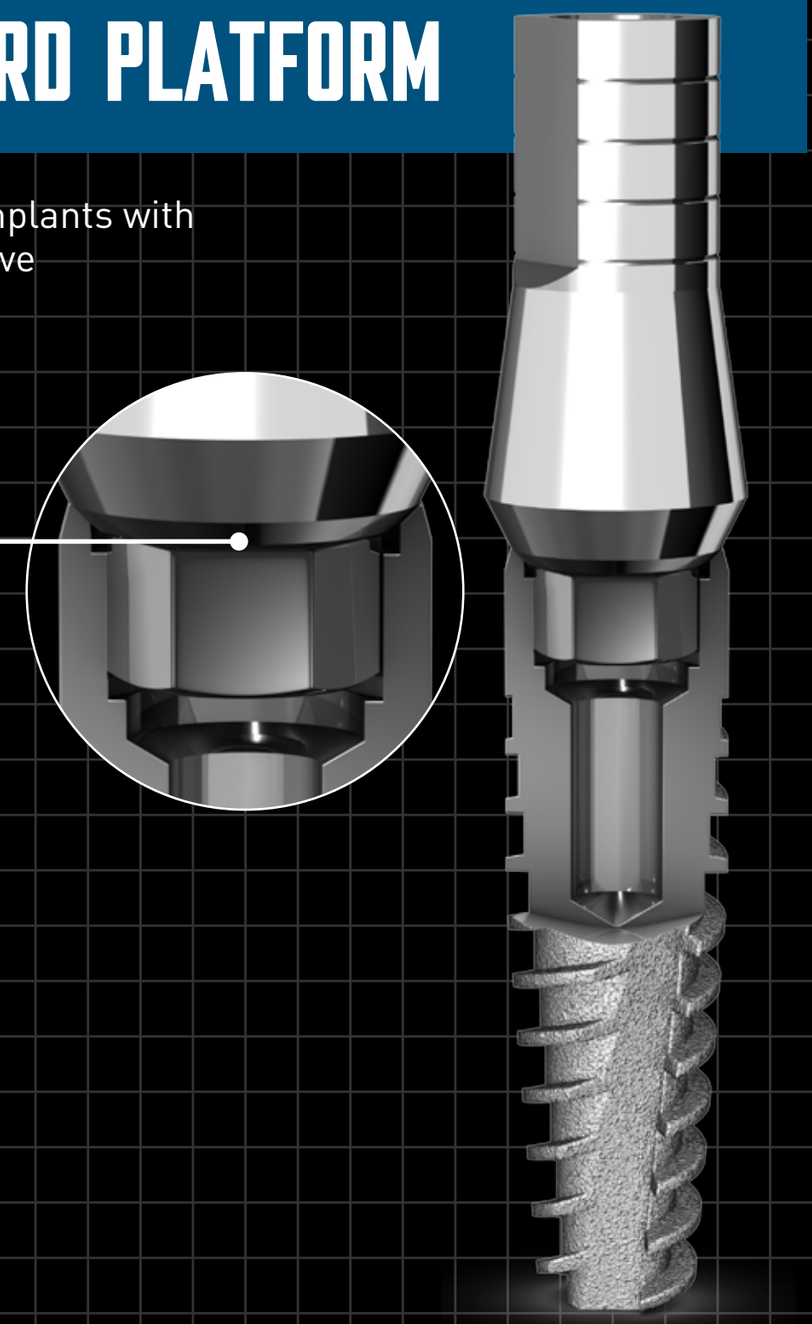

STANDARD PLATFORM

The order and presentation of these products is based on impressions taken from an implant.
There is also an option to take an impression after connecting the abutment to the implant.

	Healing caps		Impressions		Abutments	
					Custom	Temporary
Cement-Retained Restoration			D1-3.75 Page 70 D1-5 Page 70 D1-6 Page 70		P3S-PEEK Page 72	P4S-PEEK Page 73
Screw-retained Restoration	P0-3.75 Page 66 P0N-3.75 Page 66 P0W-3.75 Page 66	P0-P14 Page 90 P0-P64 Page 92	D2 Page 67 D2O Page 67 D2N Page 67 D2NO Page 67 D3 Page 68 D3N Page 68	D2-P12 Page 86 D1-P14 Page 90 D2-P14 Page 90 D1-P64 Page 92 D2-P64 Page 92	P12-T Page 87 P12-TL Page 87	
Overdenture Restoration			D4 Page 69			

Abutments									Lab products	
Custom								Individual		
Straight					Angular					
PK Page 74 P3 Page 75 P3-5 Page 75 P3N Page 75 P3W Page 75 P3S Page 76 P3SW Page 76					P4 Page 77 P4-5 Page 77 P4N Page 77 P4L Page 77 P4st Page 77 P4S Page 78 P4SW Page 78			P2N Page 79 P2NH Page 79 P2WH Page 79 P2-P3S Page 81 P2-P4S Page 82 P9HG Page 80 P9HR Page 80	P3-3.75.sc Page 83 P3L-3.75.sc Page 83 P3-3.75.TIT Page 84 P3-3.75.TI Page 84 P3H-3.75.TIT Page 84	
P7 Page 88 P7b Page 88 P7bH Page 88 P16 Page 89 P14b Page 91 P14-bT Page 91 P14-bR Page 91 P12 Page 86 P12C Page 86 P64 Page 92 P64b Page 92 P64-bT Page 92					P14 Page 90 P64 Page 92				P14.sc Page 83 P14-bRs Page 84 P14-bts Page 84 P64.sc Page 83 P64-bRs Page 84 P64-bTs Page 84	
P5 Page 94 P25 Page 95					P14BASE Page 91 P5-P14 Page 91 P25-P14 Page 91 P5-20 Page 96					

P0 TITANIUM HEALING CAP

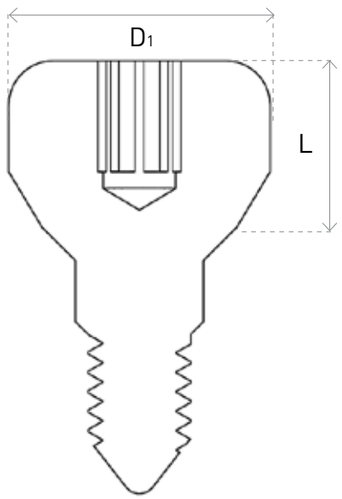

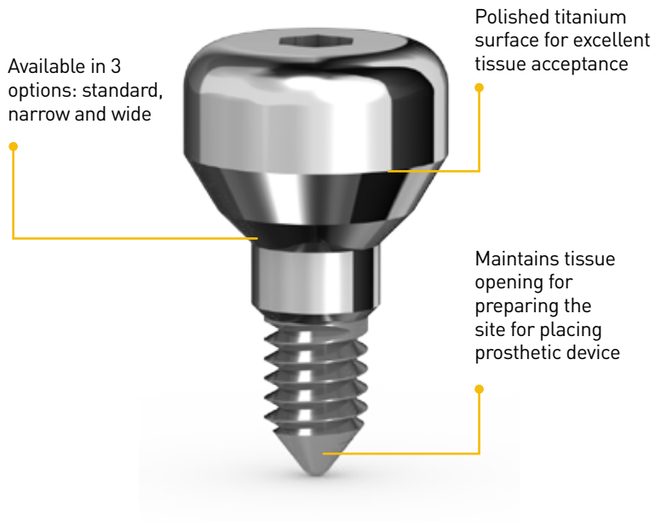

P0 Titanium healing cap	P0N Narrow titanium healing cap	P0W Wide titanium healing cap
P0-3.75, 0.5	P0N-3.75, 3	P0W-3.75, 2
P0-3.75, 2	P0N-3.75, 4	P0W-3.75, 3
P0-3.75, 3	P0N-3.75, 5	P0W-3.75, 4
P0-3.75, 4	P0N-3.75, 6	P0W-3.75, 5
P0-3.75, 5	P0N-3.75, 7	P0W-3.75, 6
P0-3.75, 6		
P0-3.75, 7		
$D_{1\,(mm)}$ = 4.5 $L_{(mm)}$ = 0.5, 2, 3, 4, 5, 6, 7	$D_{1\,(mm)}$ = 3.75 $L_{(mm)}$ =3, 4, 5, 6, 7	$D_{1\,(mm)}$ = 5.5 $L_{(mm)}$ = 2, 3, 4, 5, 6

D2 IMPRESSION TRANSFER

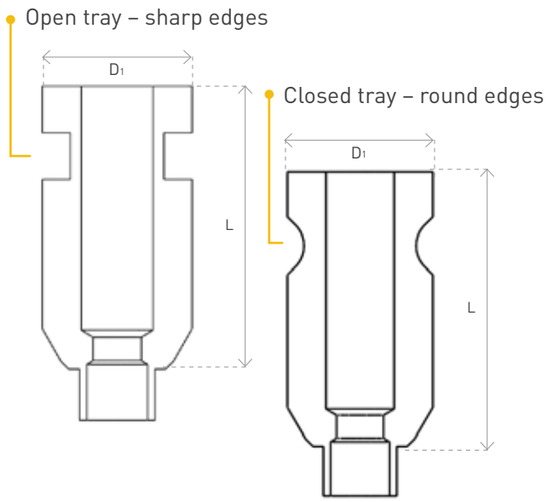

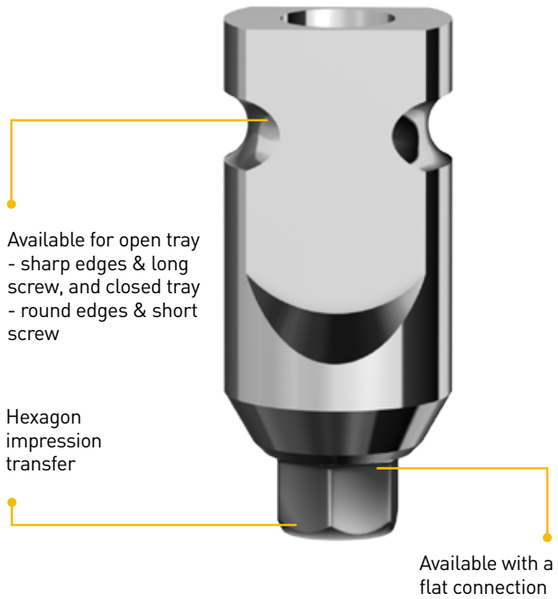

D2 Impression transfer for closed tray	D2O Impression transfer for open tray	D2N Narrow impression transfer for closed tray	D2NO Narrow impression transfer for open tray
D2-3.75, 9	D2O-3.75, 9	D2N-3.75, 9	D2NO - 3.75,15
D2-3.75, 15	D2O-3.75, 15		
$D_{1\,(mm)}$ = 4.8 $L_{(mm)}$ = 9, 15	$D_{1\,(mm)}$ = 4.8 $L_{(mm)}$ = 9, 15	$D_{1\,(mm)}$ = 3.75 $L_{(mm)}$ = 9	$D_{1\,(mm)}$ = 3.75 $L_{(mm)}$ = 15

D2 transfers are available with D2a or D2al screws. A short screw for a closed tray and a long screw for an open tray.

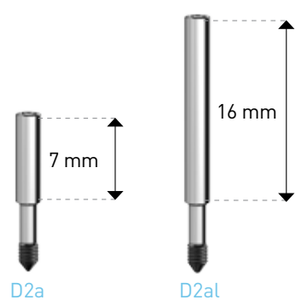

D3
CLIP TRANSFER

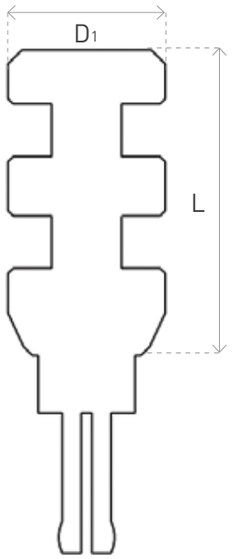

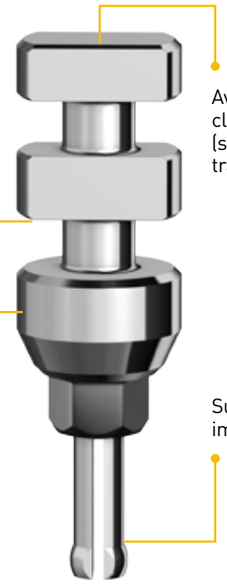

D3 Clip transfer	D3N Narrow clip transfer
D3 - 3.75, 9	D3N - 3.75, 9
D3 - 3.75, 15	D3N - 3.75, 15
$D_{1\,(mm)}$ = 4.5 $L_{(mm)}$ = 9,15	$D_{1\,(mm)}$ = 3.75 $L_{(mm)}$ = 9,15

D4 PLASTIC SNAP TRANSFER WITH ABUTMENT

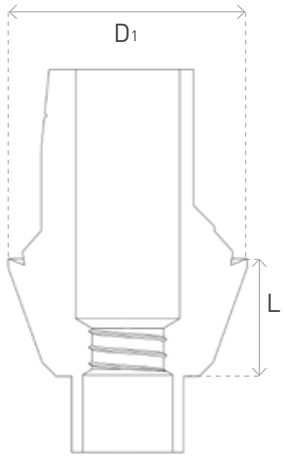

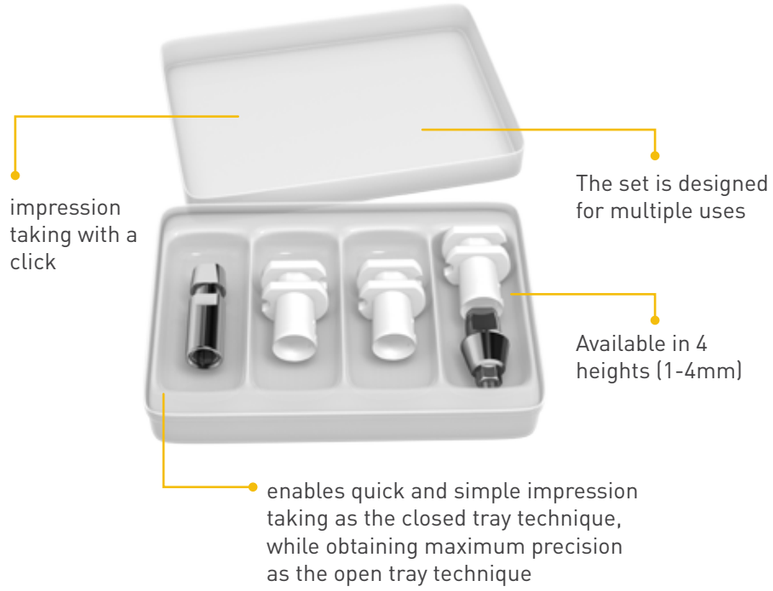

The set contains : PK-D2 Transfer (3 units), PK-P3 Abutment, D1 Analog

D4 Plastic snap transfer with abutment
D4-3.75,1
D4-3.75,2
D4-3.75,3
D4-3.75,4
$D_{1\,(mm)}$ = 5.1 $L_{(mm)}$ = 1,2,3,4

D1
Implant Analog

PK-D2
Plastic Transfer

PK-P3
Anatomic Anti – Rotation Abutment

D1 ANALOG

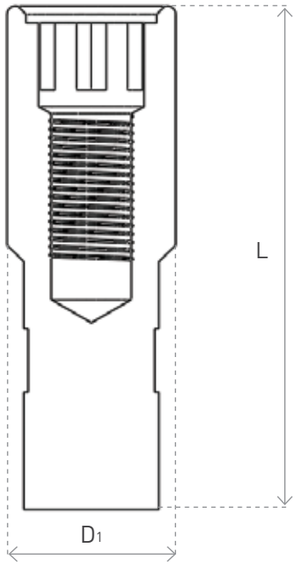

D1 - 3.75 Analog	D1 - 5 Analog	D1 - 6 Analog
D1 - 3.75	D1 - 5	D1 - 6
$D_{1\,(mm)} = 4$ $L_{(mm)} = 12$	$D_{1\,(mm)} = 5$ $L_{(mm)} = 12.3$	$D_{1\,(mm)} = 6$ $L_{(mm)} = 12.3$

CEMENT-RETAINED RESTORATION

STANDARD PLATFORM

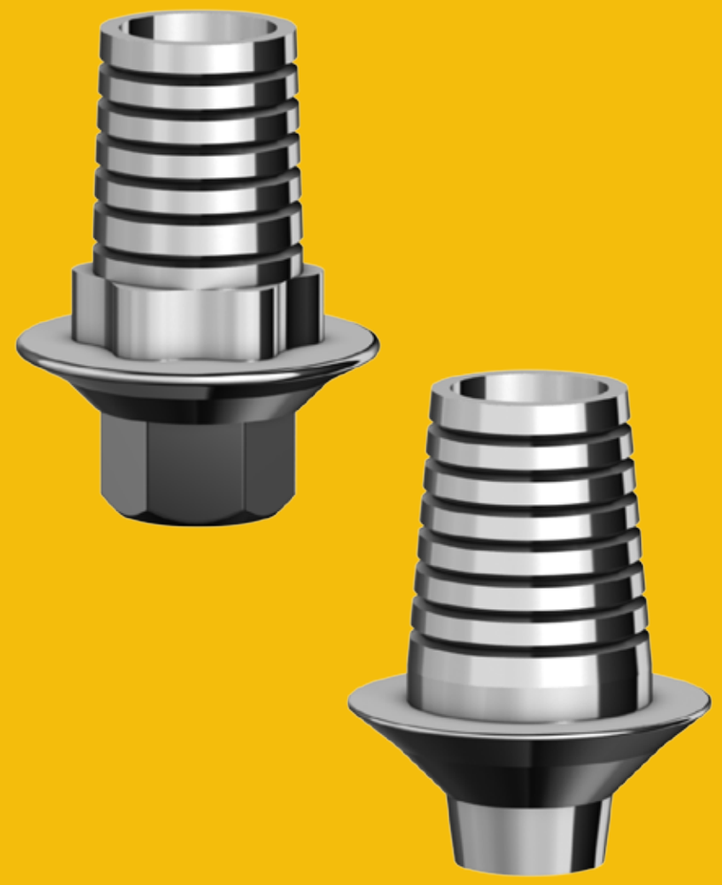

P3S-PEEK TEMPORARY ANATOMIC ANTI-ROTATION ABUTMENT

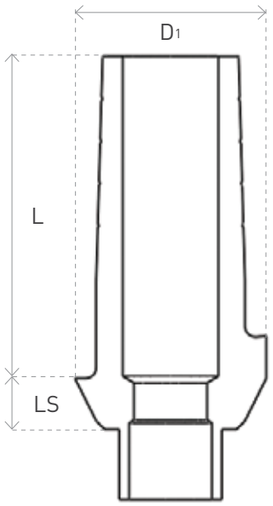

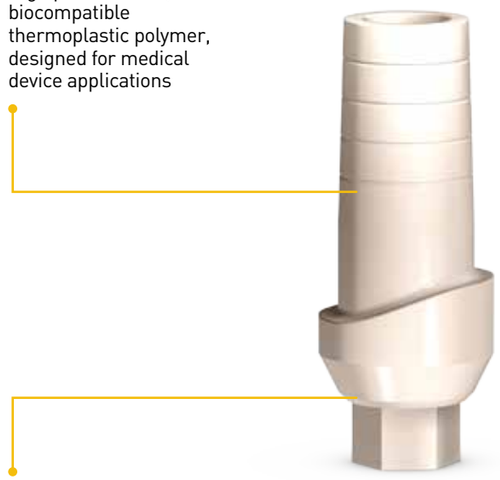

P3S PEEK Temporary peek anatomic anti-rotation abutment
P3S-PEEK-3.75, 1
P3S-PEEK-3.75, 2
P3S-PEEK-3.75, 3
$D_{1\,(mm)}$ = 4.7 $L_{(mm)}$ = 7.5 $LS_{(mm)}$ = 1, 2, 3

P4a-S

All abutments include a short screw

P4S-PEEK TEMPORARY ANATOMIC ANGULAR ABUTMENT

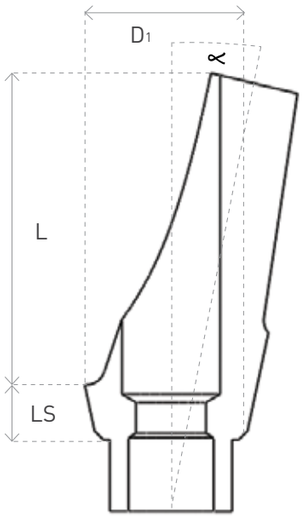

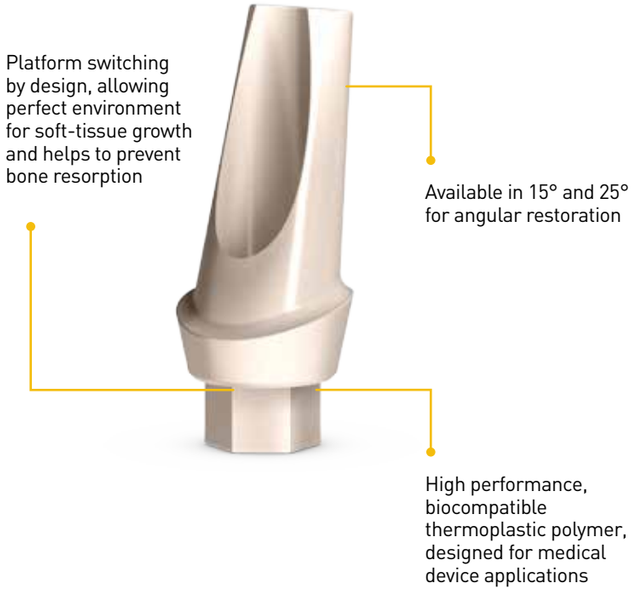

P4S-PEEK-15 Angular anatomic temporary peek	P4S-PEEK-25 Angular anatomic temporary peek
P4S-PEEK, 15-1	P4S-PEEK, 25-1
P4S-PEEK, 15-2	P4S-PEEK, 25-2
P4S-PEEK, 15-3	P4S-PEEK, 25-3
$D_{1\,(mm)}$ = 4.7 ∝ 15° $L_{(mm)}$ = 9 $LS_{(mm)}$ = 1, 2, 3	$D_{1\,(mm)}$ = 4.7 ∝ 25° $L_{(mm)}$ = 9 $LS_{(mm)}$ = 1, 2, 3

P4a-S

All abutments include a short screw

PK PROSTHETIC KIT

Perfect solution for impression and transfer techniques, both for a single crown and bridge restoration

Enables to take closed-tray impression with the benefits of an open-tray

Makes the restoration process as simple as possible; eliminating any necessary adjustments and providing a complete set of tools. No need for additional parts

Available in 4 different heights (1-4) in both platforms: standard - 3.75mm

The kit is sold in a pack of ten

PK-P3 Prosthetic Kit
PK-3.75,1
PK-3.75,2
PK-3.75,3
PK-3.75,4
$D_{1\,(mm)}$ = 5.1 $L_{(mm)}$ = 1,2,3,4

PK-D1
Implant Analog

PK-D2
Plastic Transfer

PK-P0
Healing Cap

PK-P2
Plastic Conical Sleeve

PK-P2H
Plastic Conical Sleeve

PK-P3
Anatomic Anti – Rotation Abutment

P3 ANTI-ROTATION ABUTMENT

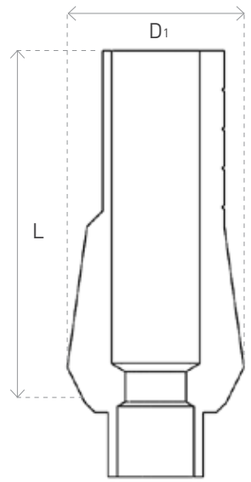

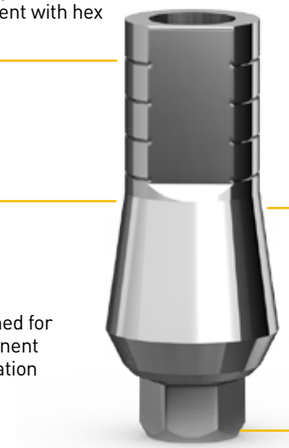

A straight titanium abutment with hex

Platform switching by design (except P3N), allowing perfect environment for soft-tissue growth and helps to prevent bone resorption

Designed for permanent restoration

Available in narrow, wide & anatomic options

P3 - 3.75 Anti-rotation abutment	P3 - 5 Anti-rotation abutment (for wide teeth)	P3N Narrow anti-rotation abutment (for narrow ridges)	P3W Wide anti-rotation abutment (for wide teeth)
P3-3.75,5	P3-5,5	P3N-3.75, 5	P3W-3.75, 9
P3-3.75,7	P3-5,7	P3N-3.75, 7	P3W-3.75, 12
P3-3.75,9	P3-5,9	P3N-3.75, 9	
P3-3.75,11			
P3-3.75,12			
P3-3.75,15			
$D_{1\,(mm)}$ = 4.5 $L_{(mm)}$ = 5,7, 9, 11,12, 15	$D_{1\,(mm)}$ = 5 $L_{(mm)}$ = 5, 7, 9	$D_{1\,(mm)}$ = 3.75 $L_{(mm)}$ = 5, 7, 9	$D_{1\,(mm)}$ = 5.5 $L_{(mm)}$ = 9, 12

All abutments include a short screw. P3al long screw is available only for P3-3.75,15mm length.

P4a-S

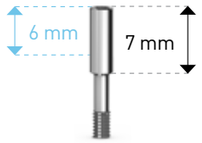

P3al

P3S ANATOMIC ANTI-ROTATION ABUTMENT

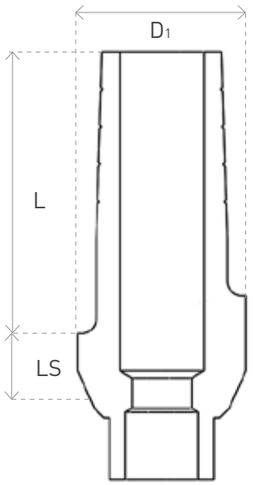

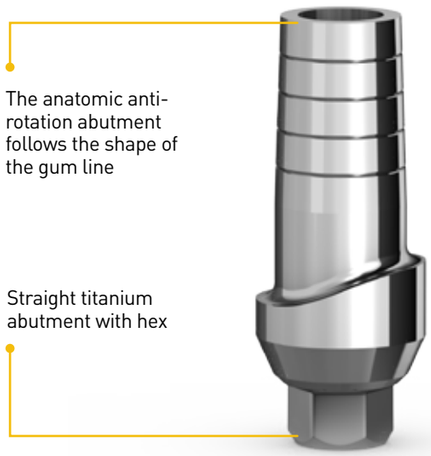

P3S Anatomic anti-rotation abutment	P3SW Wide anatomic anti-rotation abutment
P3S-3.75, 1	P3SW-3.75, 1
P3S-3.75, 2	P3SW-3.75, 2
P3S-3.75, 3	P3SW-3.75, 3
$D_{1\,(mm)}$ = 4.5 $L_{(mm)}$ = 7.5 $LS_{(mm)}$ = 1, 2, 3	$D_{1\,(mm)}$ = 5.5 $L_{(mm)}$ = 7.5 $LS_{(mm)}$ = 1, 2, 3

All abutments include a short screw.

P4 ANGULAR ABUTMENT

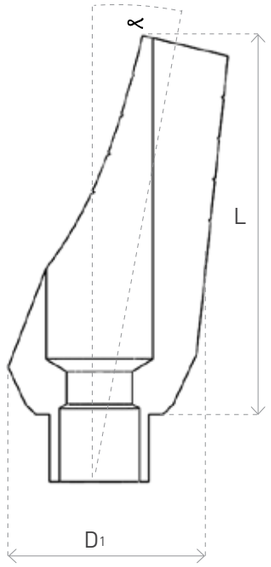

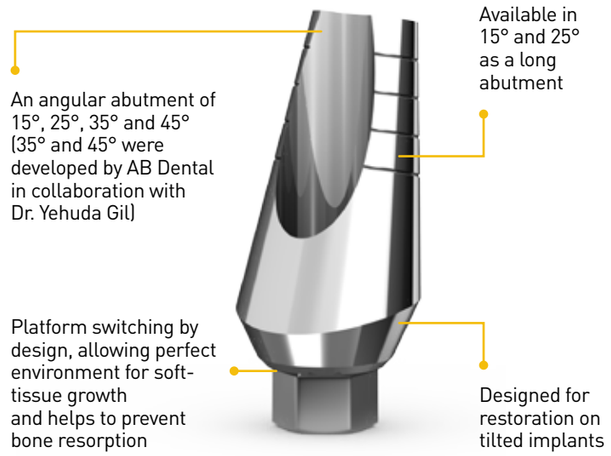

P4 Angular abutment	P4st Angular abutment	P4L Long angular abutment	P4N Narrow angular abutment	P4-5 Angular abutment
P4-3.75, 15	P4-3.75,15st	P4L-3.75, 15	P4N-3.75, 15	P4-5, 15
P4-3.75, 25	P4-3.75, 25st	P4L-3.75, 25		P4-5, 25
P4-3.75, 35				
P4-3.75, 45				
$D_{1\,(mm)}$ = 4.7 ∝ 15°, 25°, 35°, 45° $L_{(mm)}$ 15°, 25° = 9 $L_{(mm)}$ 35°, 45° = 10, 12	$D_{1\,(mm)}$ = 4.7 ∝ 15°, 25° $L_{(mm)}$ = 9	$D_{1\,(mm)}$ = 4.7 ∝ 15°, 25° $L_{(mm)}$ = 11	$D_{1\,(mm)}$ = 3.75 ∝ 15° $L_{(mm)}$ = 9	$D_{1\,(mm)}$ = 5 ∝ 15° 25° $L_{(mm)}$ = 10.75, 11.1

All abutments include a short screw excluding 35°, 45° and P4a

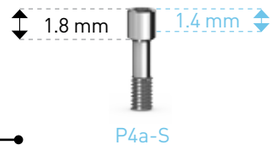

P4S ANATOMIC ANGULAR ABUTMENT

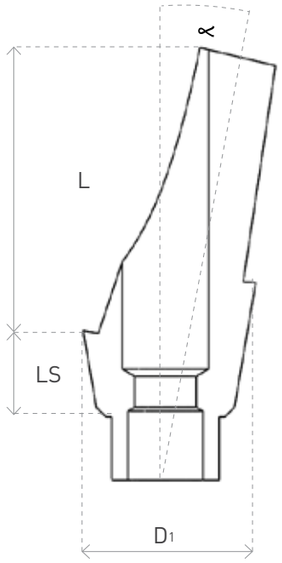

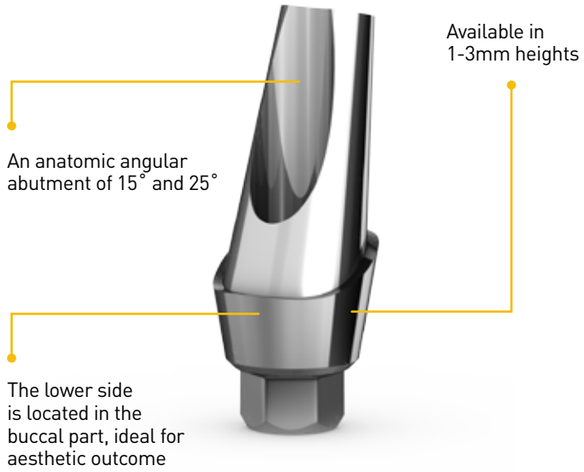

P4S - 15	P4S - 25	P4SW
Anatomic angular abutment 15° with shoulder	Anatomic angular abutment 25° with shoulder	Wide anatomic angular abutment
P4S-3.75, 15-1	P4S-3.75, 25-1	P4SW-3.75,3
P4S-3.75, 15-2	P4S-3.75, 25-2	
P4S-3.75, 15-3	P4S-3.75, 25-3	
$D_{1\,(mm)}$ = 4.7 ∝ 15° $L_{(mm)}$ = 7 $LS_{(mm)}$ = 1, 2, 3	$D_{1\,(mm)}$ = 4.7 ∝ 25° $L_{(mm)}$ = 7 $LS_{(mm)}$ = 1, 2, 3	$D_{1\,(mm)}$ = 5.7 ∝ 15° $L_{(mm)}$ = 8

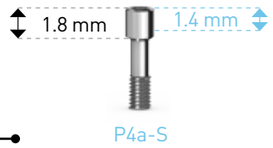

All abutments include a short screw

P2 PLASTIC SLEEVE

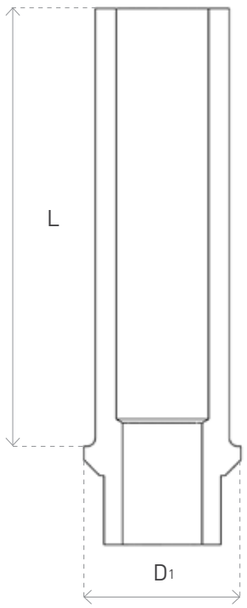

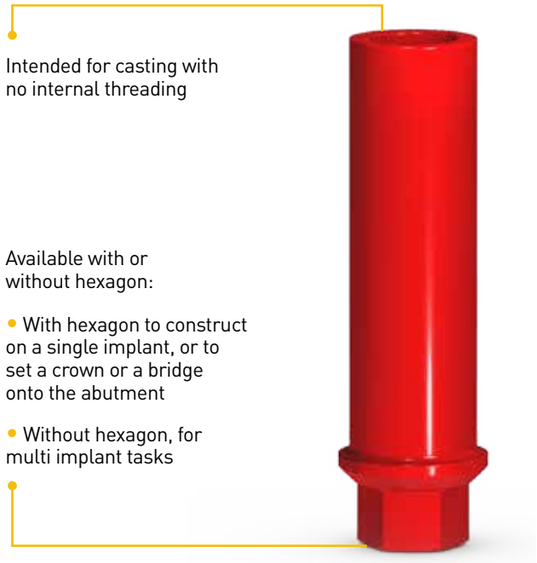

P2NH	P2N	P2WH
Plastic sleeve w/fixation screw - straight w/hex	Plastic sleeve w/fixation screw - rounded	Plastic sleeve w/fixation screw - wide w/hex
P2NH-3.75, 15	P2N-3.75, 15	P2WH-3.75, 9
$D_{1\,(mm)}$ = 3.75 $L_{(mm)}$ = 10	$D_{1\,(mm)}$ = 3.75 $L_{(mm)}$ = 10	$D_{1\,(mm)}$ = 4.7 $L_{(mm)}$ = 9

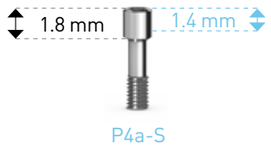

All abutments include a short screw.

P9 COMPOSED ABUTMENT

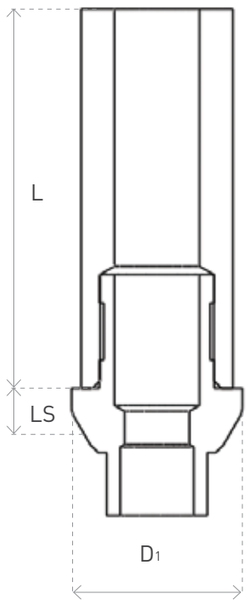

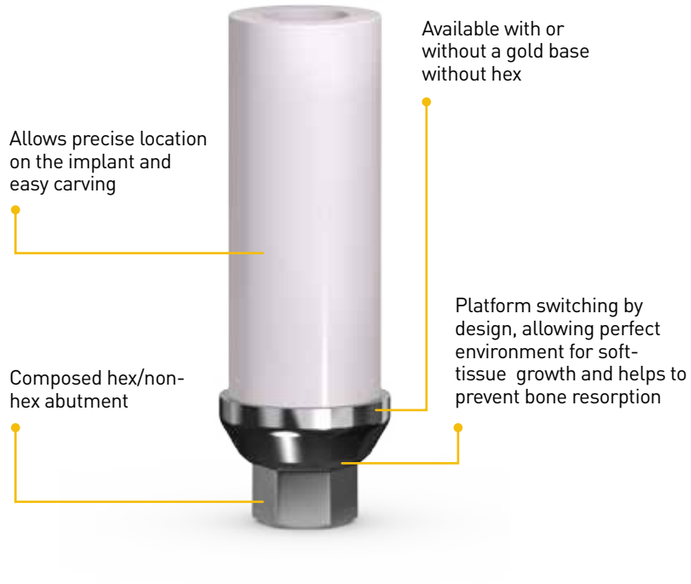

P9HR COBALT CHROME composed hex abutment	P9HG Gold composed Hex abutment	P9G Gold composed non-Hex abutment	P9R COBALT CHROME composed non-Hex abutment
P9HR-3.75,11	P9HG-3.75, 11	P9G-3.75, 11	P9R-3.75,11
$D_{1\,(mm)}$ = 4.5 $L_{(mm)}$ = 10	$D_{1\,(mm)}$ = 4.5 $L_{(mm)}$ = 10 $LS_{(mm)}$ = 1	$D_{1\,(mm)}$ = 4.5 $L_{(mm)}$ = 10 $LS_{(mm)}$ = 1	$D_{1\,(mm)}$ = 4.5 $L_{(mm)}$ = 10 $LS_{(mm)}$ = 1

All abutments include a short screw.
A long screw is available separately

P4a-S

P2-P3S STRAIGHT ANATOMIC PLASTIC SLEEVE

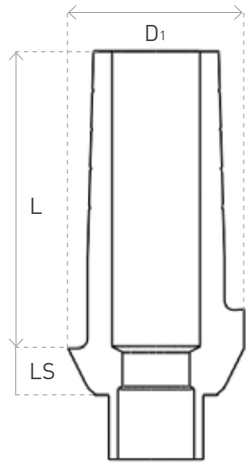

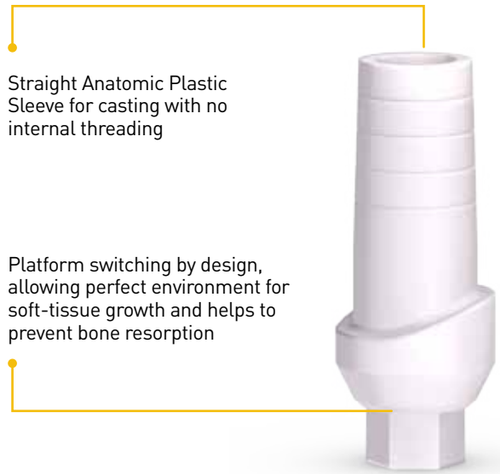

P2-P3S Straight anatomic plastic sleeve
P2-P3S-3.75, 1
P2-P3S-3.75, 2
P2-P3S-3.75, 3
$D_{1\,(mm)}$ = 4.7 $L_{(mm)}$ = 7.5 $LS_{(mm)}$ = 1, 2, 3

All abutments include a short screw

P4a-S

P2-P4S ANGULAR ANATOMIC PLASTIC SLEEVE

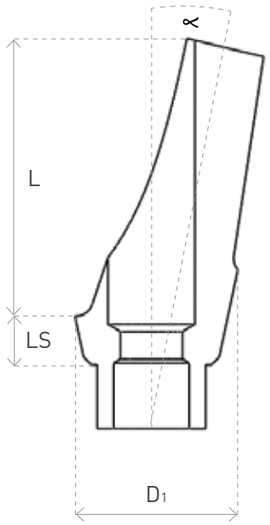

Angular Anatomic Plastic Sleeve for casting with no internal threading

Platform switching by design, allowing perfect environment for soft-tissue growth and helps to prevent bone resorption

P2-P4S-15	P2-P4S-25
Angular anatomic plastic sleeve	Angular anatomic plastic sleeve
P2-P4S-3.75, 15-1	P2-P4S-3.75, 25-1
P2-P4S-3.75, 15-2	P2-P4S-3.75, 25-2
P2-P4S-3.75, 15-3	P2-P4S-3.75, 25-3
$D_{1\,(mm)}$ = 4.7 ∝ 15° $L_{(mm)}$ = 7 $LS_{(mm)}$ = 1, 2, 3	$D_{1\,(mm)}$ = 4.7 ∝ 25° $L_{(mm)}$ = 7 $LS_{(mm)}$ = 1, 2, 3

All abutments include a short screw

CAD/CAM SCAN ABUTMENTS

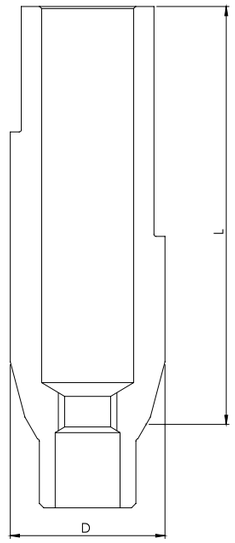

These 3D libraries enable precise computerized planning of the future restoration by scanning the implants and/or abutments of all types

The scanning information is used to produce precise restoration on AB implants using CAD/CAM

CAD/CAM technology simplifies the work flow, ensuring accuracy, speed and patient comfort

AB Dental products have been added to the libraries of a wide range of companies

Also for intra-oral scanning

Made from PEEK - A high performance, biocompatible thermoplastic polymer

P3	P3L	P14	P64
Scanning base for straight abutment	Scanning base for straight abutment	Scanning base for angular adaptor	Scanning base for angular adaptor
P3-3.75,sc	P3L-3.75,sc	P14,sc	P64,sc
$D_{(mm)}$ = 4.5 $L_{(mm)}$ = 4	$D_{(mm)}$ = 4.2 $L_{(mm)}$ = 10	$D_{(mm)}$ = 5.5 $L_{(mm)}$ = 6.1	$D_{(mm)}$ = 5.5 $L_{(mm)}$ = 6.1

Scan abutments includes a short screw

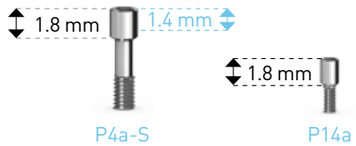

CAD/CAM TITANIUM BASE

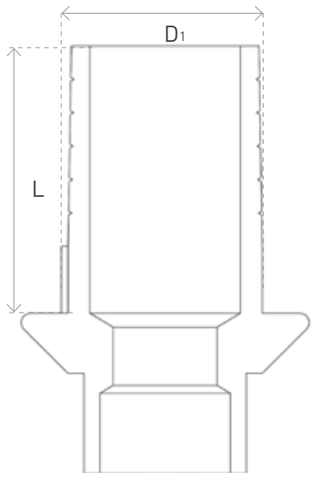

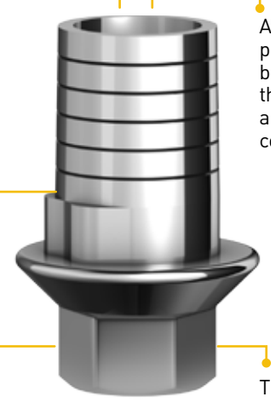

These 3D libraries enable precise computerized planning of the future restoration by scanning the implants and/or abutments of all types

AB Dental products have been added to the libraries of a wide range of companies

The scanning information is used to produce precise restoration on AB implants using CAD/CAM

CAD/CAM technology simplifies the work flow, ensuring accuracy, speed and patient comfort

Titanium base for cementing crowns and bridges made by CAD/CAM

P3 Straight abutment for gluing position	P14 Titanium/Cobalt chrome short sleeve for angular adaptor	P64 Titanium/Cobalt chrome short sleeve for angular adaptor
P3-3.75,TI Slim - suitable for single crown	P14-btS Titanium short sleeve	P64-bTs Titanium short sleeve
P3H-3.75,TIT Suitable for single crown	P14-bRs Cobalt chrome short sleeve	P64-bRs Cobalt chrome short sleeve
P3-3.75,TIT Suitable for bridges		
D (mm) = 4.3 L (mm) = 6.4, 6.65	D (mm) = 4.4 L (mm) = 5.5	D (mm) = 4.9 L (mm) = 5.55

The relevant data is incorporated in the libraries of the following systems: 3shape, dental wings, exocad

Titanium base includes a short screw

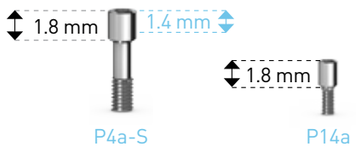

SCREW-RETAINED RESTORATION

STANDARD PLATFORM

P12 FLAT CONNECTION ABUTMENT

ISSUED PATENT!

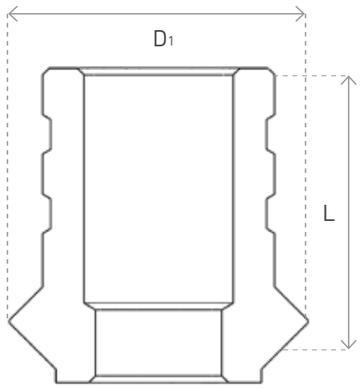

Provides a comprehensive solution for temporary and permanent restoration while retaining maximum precision

Used for screw retained restoration and enables restoration on non-parallel implants by cancelling the hex and thereby cancelling the obstruction of the insertion path

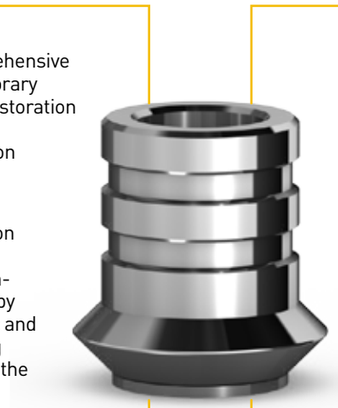

Issued Patent by A.B. Dental

Platform switching by design, allowing perfect environment for soft-tissue growth and helps to prevent bone resorption

P12 Flat connection abutment	P12C Adaptor for flat connection abutment	D2-P12 Impression transfer for flat connection abutment	D2N-P12 Narrow impression transfer for P12
P12-3.75	P12C-3.75, 3	D2-P12-3.75,9	D2N-P12-3.75,9
	P12C-3.75,5	D2-P12-3.75,15	D2N-P12-3.75,15
$D_{1\,(mm)}$ = 4.5 $L_{(mm)}$ = 5	$D_{1\,(mm)}$ = 3.75 $L_{(mm)}$ = 3, 5	$D_{1\,(mm)}$ = 4.5 $L_{(mm)}$ = 9, 15	$D_{1\,(mm)}$ = 3.75 $L_{(mm)}$ = 9, 15

*In case of a non-double platform implant, the P12C adaptor enables the use of a flat connection abutment.

All abutments include a short screw and plastic sleeve P12p.

D2-P12 transfer is available with a D2-P12ca or a D2al screw.

The P12C-3.75,3 includes a P12Ca screw.

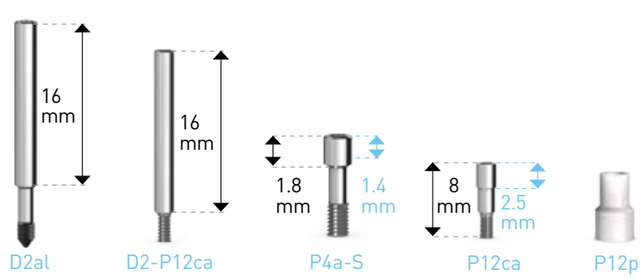

Temporary Abutment

P12-T Temporary flat conection abutment	P12-T/L Temporary flat conection long abutment
P12-3.75-T	P12-3.75-T/L
$D_{1\,(mm)}$ = 4.5 $L_{(mm)}$ = 15 $L_{1\,(mm)}$ = 7	$D_{1\,(mm)}$ = 4.5 $L_{(mm)}$ = 15 $L_{1\,(mm)}$ = 11

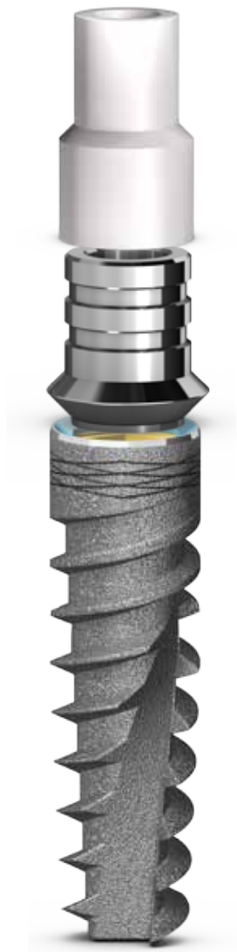

P7 ANTI-ROTATION AESTHETIC ABUTMENT

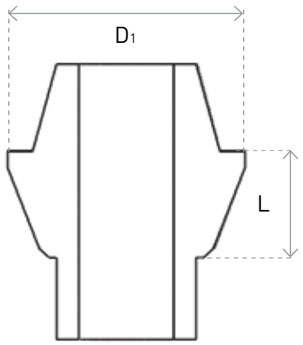

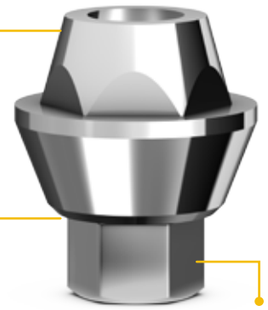

Suitable for restorations on a single implant or a screwed bridge on non-parallel implants

Platform switching by design, allowing perfect environment for soft-tissue growth and helps to prevent bone resorption

An abutment with hex on both sides

P7 Aesthetic abutment	P7b Plastic sleeve without hex	P7b-H Plastic sleeve with hex
P7-3.75, 1	P7b	P7b-H
P7-3.75, 2		
P7-3.75, 3		
$D_{1\,(mm)}$ = 4.7 $L_{(mm)}$ = 1, 2, 3	$D_{1\,(mm)}$ = 6 $L_{(mm)}$ = 8.5	$D_{1\,(mm)}$ = 4.7 $L_{(mm)}$ = 12

All abutments include a P7-a screw according to the abutment heights respectively. P7 includes a P7b plastic sleeve without hex.

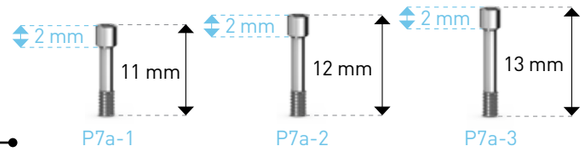

P16 STRAIGHT ADAPTOR

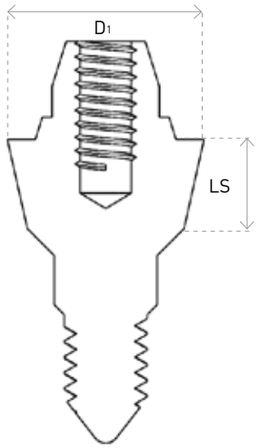

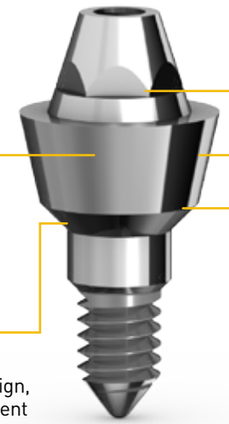

The upper cone solves the lack of parallelism

The over denture system is screwed to the cone. Available in different heights

Platform switching by design, allowing perfect environment for soft-tissue growth and helps to prevent bone resorption

The impression-taking is performed over the installed adaptors

The new product design allows for a greater space for the gums

Facilitates the installation of an over denture system on nonparallel implants

A straight adaptor made from titanium

P16 Straight adaptor	P0-P14 Healing cap for P14	D2-P14 Transfer for P14	D1-P14 Analog for P14	P14b Sleeve for P14
P16-3.75,1	P0-P14,5	D2-P14	D1-P14	P14-Plastic
P16-3.75,2	P0-P14,7			P14-bt-Titanium
P16-3.75,3				P14-bR-Cobalt Chrome
P16-3.75,4				
P16-3.75,5				
$D_{1\,(mm)}$ = 4.5 $LS_{(mm)}$ = 1, 2, 3, 4, 5	$D_{1\,(mm)}$ = 4.5 $L_{(mm)}$ = 5, 7	$D_{1\,(mm)}$ = 4.5 $L_{(mm)}$ =11	$D_{1\,(mm)}$ = 4.5 $L_{(mm)}$ =12	$D_{1\,(mm)}$ = 4.5 $L_{(mm)}$ = 12

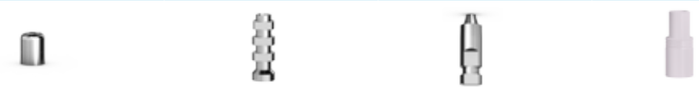

P16 adaptor includes a P14a screw

4 different sleeves for casting are available with this abutment: Plastic, titanium, cobalt chrome or gold

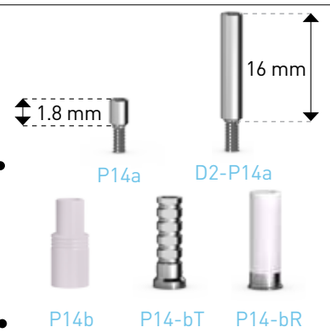

ISSUED PATENT!

P14 ANGULAR ADAPTOR

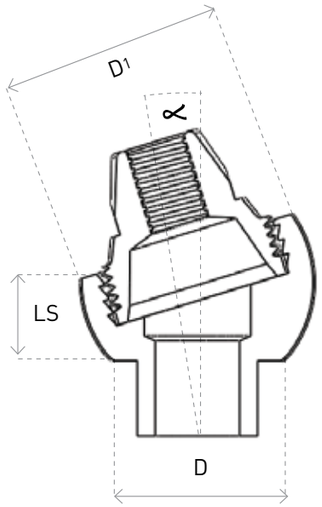

The adaptor (base & cone) enables restoration on non-parallel implants by correcting extreme angles of the implant

Platform switching by design, allowing perfect environment for soft-tissue growth and helps to prevent bone resorption

Issued Patent by A.B. Dental

The angle of the implant is corrected by using a base. The cone enables connection of a temporary titanium abutment or permanent abutment made with plastic sleeves for casting

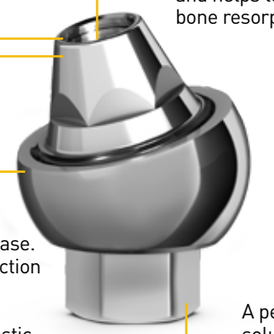

A perfect solution for "All on four" restorations

P14b	P14-bT	P14-bR
Plastic sleeve for angular adaptor	Titanium sleeve for angular adaptor	Cobalt chrome for angular adaptor
P14b	P14-bT	P14-bR
$D_{1\,(mm)}$ = 4.4 $L_{(mm)}$ = 10	$D_{1\,(mm)}$ = 4.4 $L_{(mm)}$ = 12	$D_{1\,(mm)}$ = 4.4 $L_{(mm)}$ = 10

P14-17	P14-30	PO-P14	D2-P14	D1-P14
Angular adaptor	Angular adaptor	Healing cap for P14	Transfer for P14	Analog for P14
P14-3.75, 17-1	P14-3.75, 30-1	PO-P14,2.5	D2-P14	D1-P14
P14-3.75, 17-3	P14-3.75, 30-3	PO-P14,4		
		PO-P14,5		
		PO-P14,7		
$D_{1\,(mm)}$ = 4.4 ∝ 17⁰ $LS_{(mm)}$ = 1.35, 3.75	$D_{1\,(mm)}$ = 4.4 ∝ 30⁰ $LS_{(mm)}$ = 1.5, 3	$D_{1\,(mm)}$ = 4.4 $L_{(mm)}$ = 2.5,4, 5, 7	$D_{1\,(mm)}$ = 4.4 $L_{(mm)}$ =11	$D_{1\,(mm)}$ = 4.4 $L_{(mm)}$ = 12

P14 components

P14 adaptor is available with P14a and P14e screws.
D2-P14 transfer is available with a D2-P14a screw

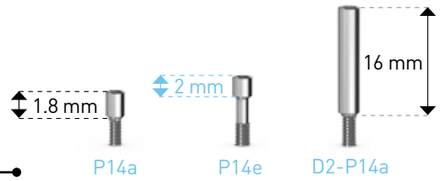

Base for angular adaptor

P14base-17	P14base–30	P5-P14	P25-P14
Base for angular adaptor	Base for angular adaptor	Ball for angular adaptor	AB LOC for Angular Adaptor
P14base, 17-1	P14base, 30-1	P5-P14, 1	P25-P14,1
P14base, 17-3	P14base, 30-3	P5-P14, 2	P25-P14,2
$D_{1\,(mm)}$ = 4.4 ∝ 17⁰ $LS_{(mm)}$ = 1.35, 3.75	$D_{1\,(mm)}$ = 4.4 ∝ 30⁰ $LS_{(mm)}$ = 1.5, 3	$D_{1\,(mm)}$ = 4.4 $L_{(mm)}$ = 12	$D_{1\,(mm)}$ = 4.4 $L_{(mm)}$ = 1,2

Sleeves are available with a P14a screw

P64 ANGULAR ADAPTOR SINGLE UNIT

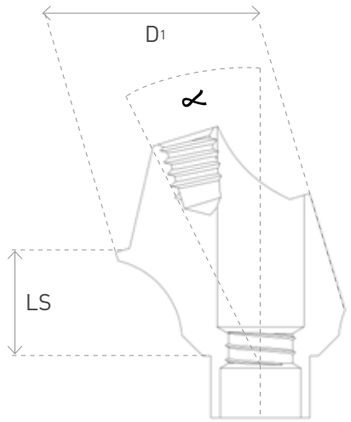

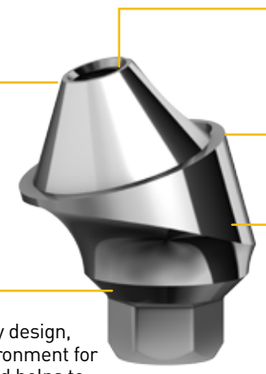

Path of insertion is especially wide

Enables restoration on non-parallel implants by correcting extreme angles of implants

Available in angles of 17°, 30°, 42°

The conical screw thread is deep and wide, giving additional strength to the abutment

Platform switching by design, allowing perfect environment for soft-tissue growth and helps to prevent bone resorption

P64 Straight adaptor single unit	P64-17 Angular adaptor single unit	P64-30 Angular adaptor single unit	P64-42 Angular adaptor single unit
P64-3.75, 1	P64-3.75, 17-0.5	P64-3.75, 30-0.5	P64-3.75, 42-0.5
P64-3.75, 2	P64-3.75, 17-2	P64-3.75, 30-2	P64-3.75, 42-2 Sale in China only
P64-3.75, 3	P64-3.75, 17-3	P64-3.75, 30-3	
P64-3.75, 4	P64-3.75, 17-4	P64-3.75, 30-4	
P64-3.75, 5	P64-3.75, 17-5	P64-3.75, 30-5	
D_1 (mm) = 4.9 LS (mm) = 1, 2, 3, 4, 5	D_1 (mm) = 4.9 ∝ 17° LS (mm) = 0.5, 2, 3, 4, 5	D_1 (mm) = 4.9 ∝ 30° LS (mm) = 0.5, 2, 3, 4, 5	D_1 (mm) = 4.9 ∝ 40° LS (mm) = 0.5

P0-P64 Healin cap for P64	D2-P64 Transfer for P64	D1-P64 Analog for P64	P64b Plastic sleeve for P64	P64-bT Titanium sleeve for P64
P0-P64, 5	D2-P64	D1-P64	P64b	P64-bT
D_1 (mm) = 4.9 L (mm) =5	D_1 (mm) = 4.9 L (mm) =12.5	D_1 (mm) = 4.9 L (mm) =14.2	D_1 (mm) = 4.9 L (mm) =10	D_1 (mm) = 4.9 L (mm) = 12

All sleeves include a P64a screw.
P64 adaptor is available with P14a and P64e screws.
P64 adaptor is available with P64c Carrier

P14a P64e P64c D2-P14a

OVERDENTURE RESTORATION

STANDARD PLATFORM

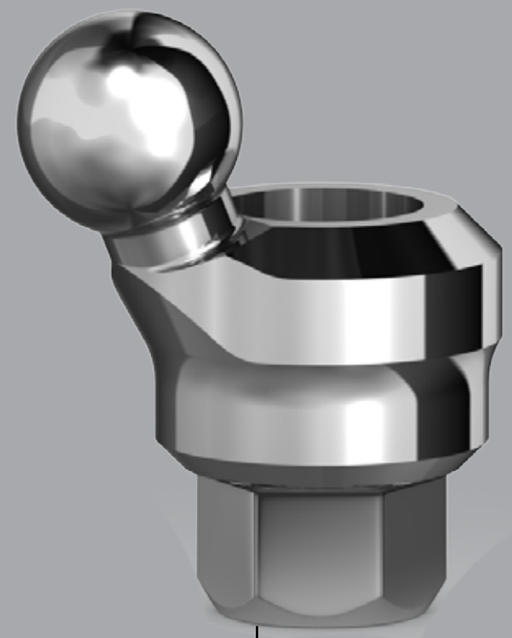

P5
BALL ATTACHMENT ABUTMENT

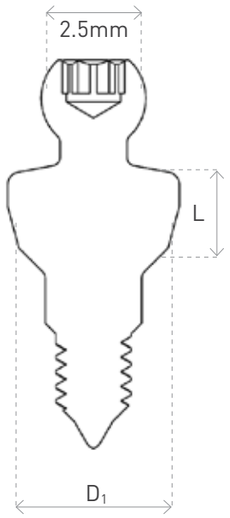

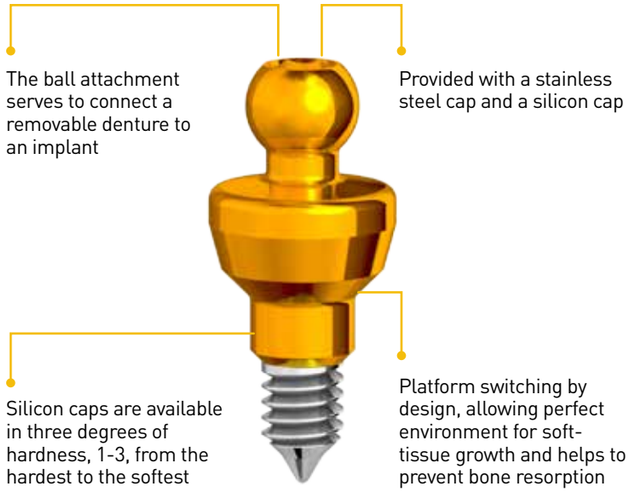

P5 Ball attachment abutment	P5a Metal cap	P5b Silicon cap	P5d Protective disk
P5-3.75, 1	P5a	P5b-1 (hard, grey color)	P5d
P5-3.75, 2		P5b-2 (medium, transparent color)	
P5-3.75, 3		P5b-3 (soft, pink color)	
P5-3.75, 4			
P5-3.75, 5			
P5-3.75, 6			
$D_{1\,(mm)}$ =4.1 $L_{(mm)}$ =1, 2, 3 4, 5, 6	$D_{1\,(mm)}$ =5 $L_{(mm)}$ = 3.2	$D_{1\,(mm)}$ =4 $L_{(mm)}$ = 2.5	

P5 attachment is also availble as a set including metal and silicon caps

P5-3.75 P5a P5b

P25
AB LOC

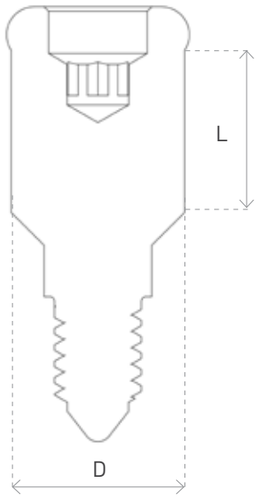

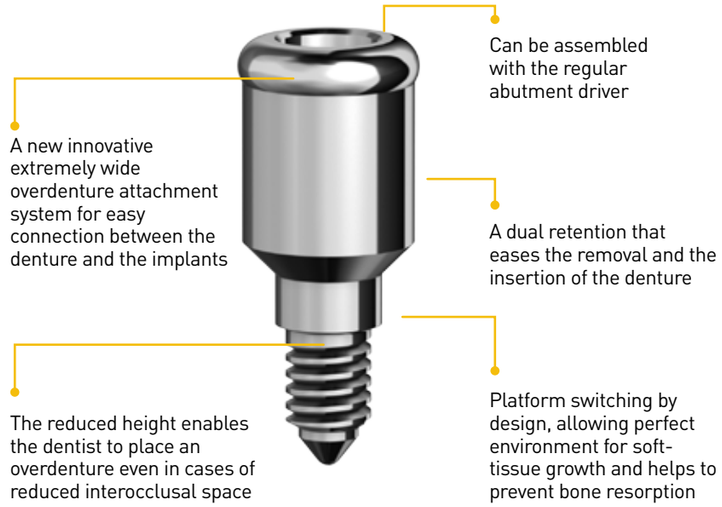

P25 AB Loc	P25a Metal cover	P25b Silicon cap	P25d Protective disk
P25-3.75, 0	P25a	P25-a,b/10 Locator Male Processing Package (Yellow-extra soft, Pink-soft, Purple-strong, Transparent-standard)	P25d
P25-3.75, 1		P25-a,b/20 Locator Extended Range Male Processing Package (Yellow-extra soft, Pink-soft, Purple-strong, Transparent-standard)	
P25-3.75, 2			
P25-3.75, 3			
P25-3.75, 4			
P25-3.75, 5			
$D_{1\,(mm)}$ = 3.7 $L_{(mm)}$ = 0.2,1,2,3,4,5	$D_{1\,(mm)}$ = 5.4 $L_{(mm)}$ = 2	$D_{1\,(mm)}$ =4.6 $L_{(mm)}$ =1.7	

P55 attachment includes metal and silicon caps

P25 P25a

P5-20 ANGULAR BALL ATTACHMENT 20°

ISSUED PATENT!

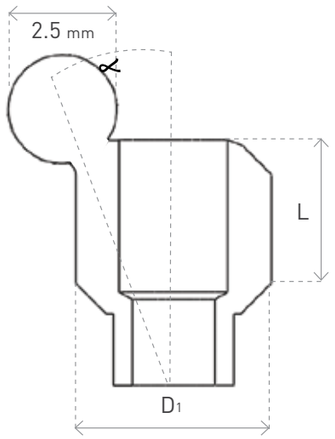

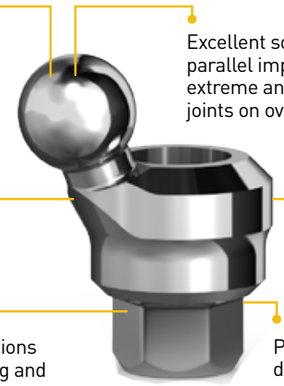

Multi-optional angular ball attachment, made from a single piece, designed to connect a denture on tilted implants

Excellent solution for non-parallel implants, even at extreme angles, for accurate joints on over denture implants

Enables adjustment of the angle at which the implant is positioned

Issued Patent by A.B. Dental

Provides multiple solutions for difficulties in affixing and removing over dentures, side pressures from other teeth/implants and prevents wear of ball attachment

Platform switching by design, allowing perfect environment for soft-tissue growth and helps to prevent bone resorption

P5-20 Angular ball attachment 20°	P5a Metal cap	P5b Silicon cap	P5d Protective disk
P5-3.75, 20-1	P5a	P5b-1 (hard, grey color)	P5d
P5-3.75, 20-2		P5b-2 (medium, transparent color)	
P5-3.75, 20-3		P5b-3 (soft, pink color)	
P5-3.75, 20-4			
P5-3.75, 20-5			
P5-3.75, 20-6			
$D_{1\,(mm)}$ =4 ∝ 20° $L_{(mm)}$ =1, 2, 3, 4, 5, 6	$D_{1\,(mm)}$ =5 $L_{(mm)}$ = 3.2	$D_{1\,(mm)}$ =4 $L_{(mm)}$ =2.5	

P5-20 abutments Include a P5-20a screw and a silicon cap

P5-20 attachment is also availble as a set including metal and silicon caps

CONICAL PLATFORM

Designed for coniacl platform implants only

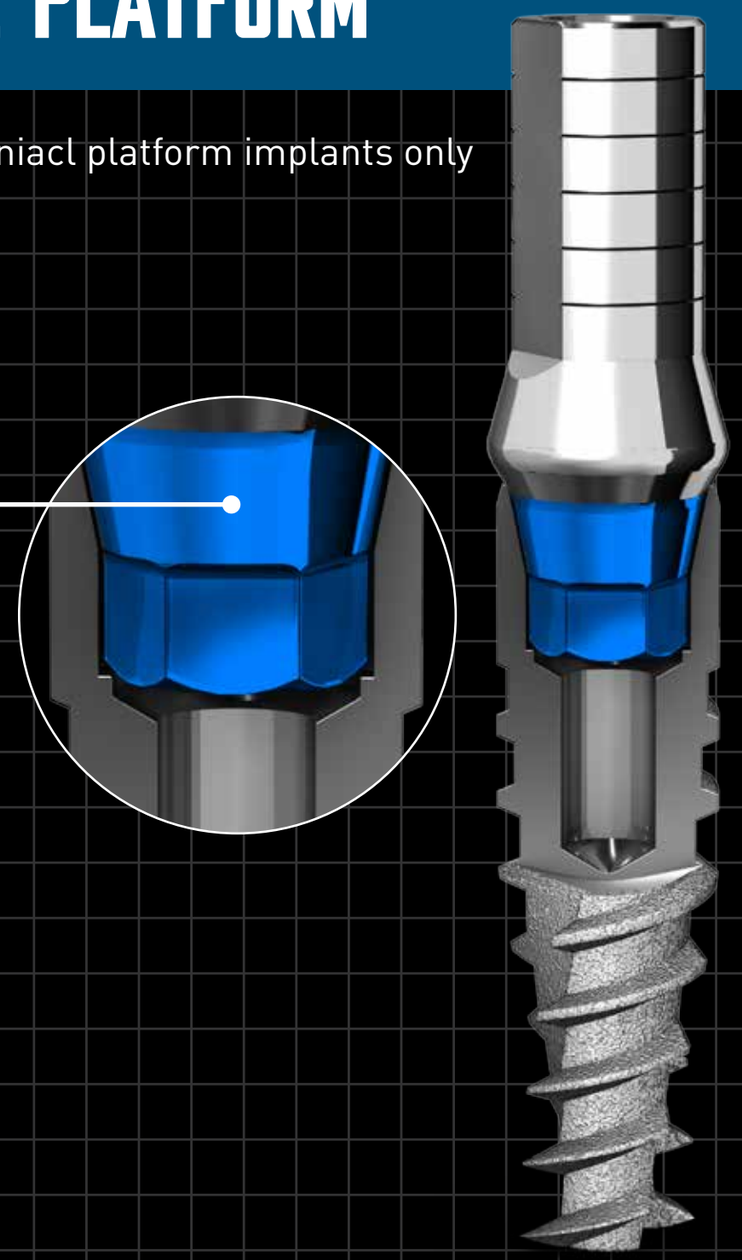

CONICAL PLATFORM

The order and presentation of these products is based on impressions taken from an implant. There is also an option to take an impression after connecting the abutment to the implant.

	Healing caps	Impressions	Abutments			
			Custom			Individual
			Temporary	Straight	Angular	
Cement-Retained Restoration				P3C Page 105	P4C Page 106	
Screw-retained Restoration	P0C Page 100	D1C Page 103 D2C Page 101				
Overdenture Restoration		D3C Page 102		P5C Page 108		

P0C TITANIUM HEALING CAP WITH CONICAL PLATFORM

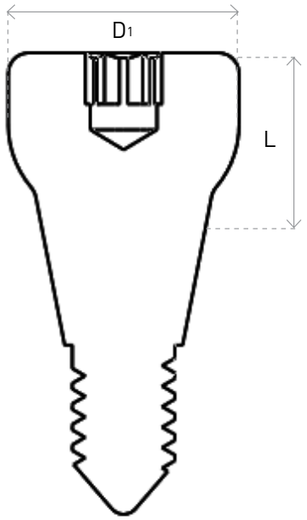

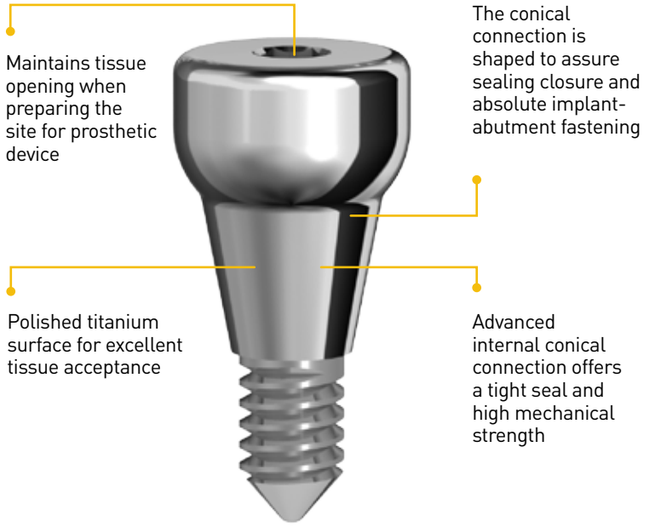

P0C Titanium healing cap with conical platform
P0C-4,2
P0C-4,3
P0C-4,4
P0C-4,5
$D_{1\,(mm)}$ = 4.5 $L_{(mm)}$ = 2, 3, 4, 5

D2C IMPRESSION TRANSFER WITH CONICAL PLATFORM

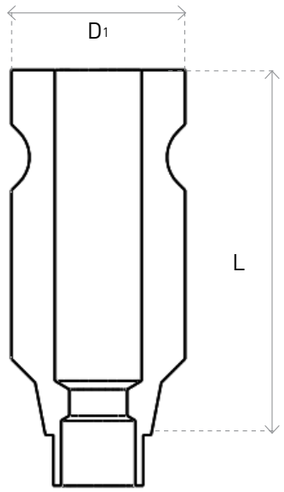

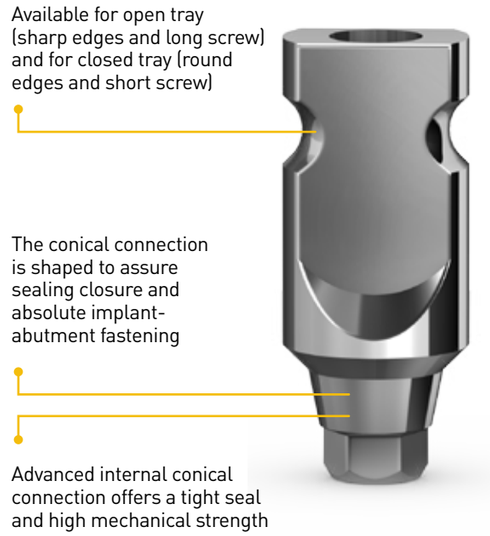

D2C Impression transfer with conical platform
D2C-4,9
D2C-4,15
$D_{1\,(mm)}$ = 4.7 $L_{(mm)}$ = 9, 15

D2C transfer is available with D2Ca-4 or D2Cal-4 screws.
A short screw for a closed tray and a long screw for an open tray.

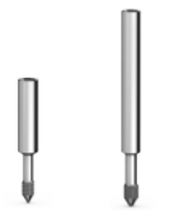

D2Ca-4 D2Cal-4

D3C CLIP TRANSFER WITH CONICAL PLATFORM

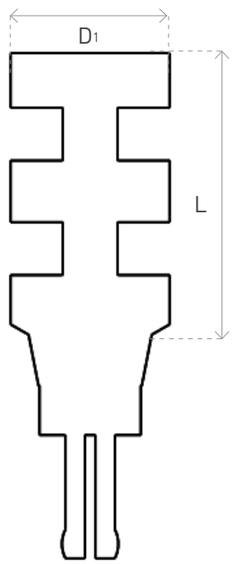

Especially efficient in posterior areas with a limited intermaxillary space for a driver

Suitable for parallel implants only

The conical connection is shaped to assure sealing closure and absolute implant-abutment fastening

Advanced internal conical connection offers a tight seal and high mechanical strength

Remains in the impression throughout the process

D3C

Clip transfer with conical platform

D3C-4,9

D3C-4.15

$D_{1\,(mm)}$ = 4.5

$L_{(mm)}$ = 9, 15

D1C ANALOG WITH CONICAL PLATFORM

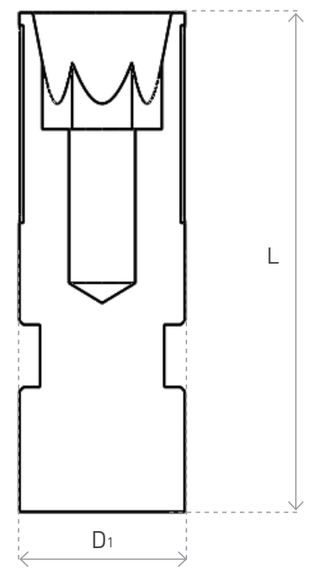

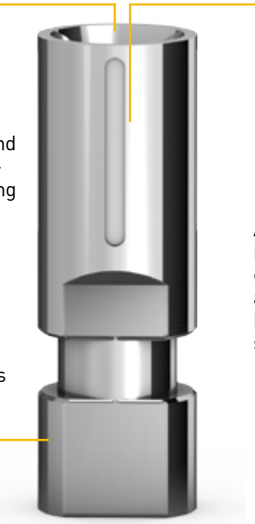

The conical connection is shaped to assure sealing closure and absolute implant-abutment fastening

Advanced internal conical connection offers a tight seal and high mechanical strength

Made of stainless steel to allow preparation of laboratory models

D1C

Analog with conical platform

D1C-4

$D_{1\,(mm)}$ = 4

$L_{(mm)}$ = 12

CEMENT-RETAINED RESTORATION

CONICAL PLATFORM

P3C ANTI-ROTATION ABUTMENT WITH CONICAL PLATFORM

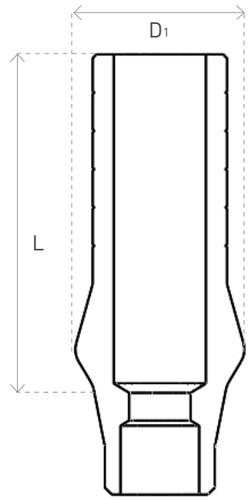

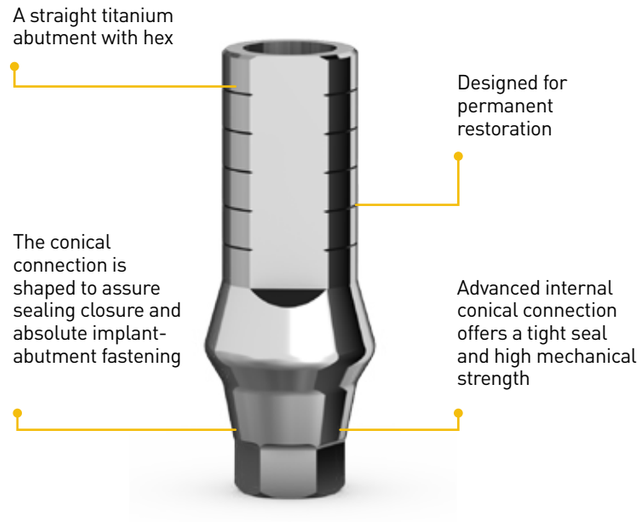

P3C

Anti-rotation abutment with conical platform

P3C-4,9

$D_{1\,(mm)} = 4.5$

$L_{(mm)} = 9$

All abutments include short screw

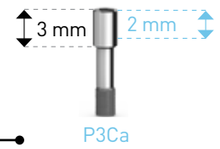

P4C ANGULAR ABUTMENT WITH CONICAL PLATFORM

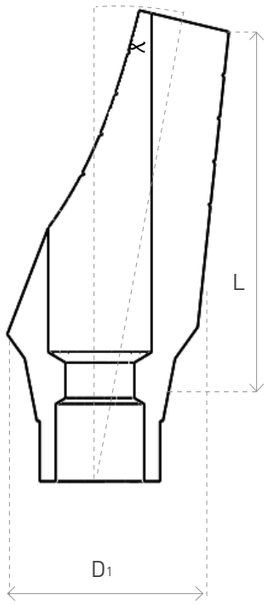

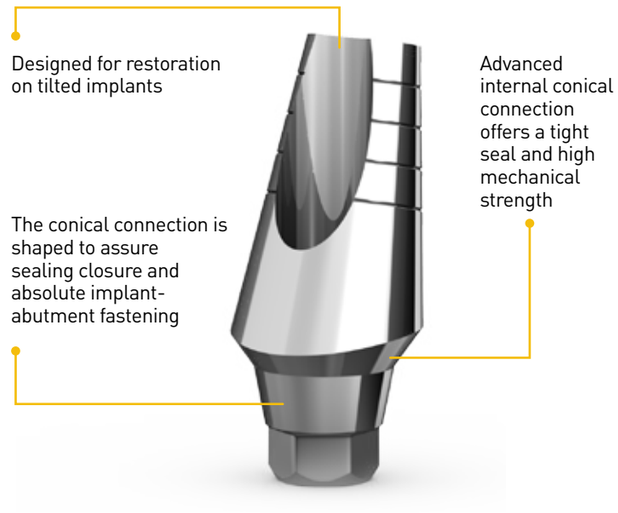

P4C

Angular abutment with conical platform

P4C-4,15
P4C-4,25
$D_{1\,(mm)}$ = 4.85 ∝ 15°, 25° $L_{(mm)}$ 15°, 25° = 9

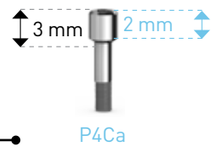

All abutments include short screw

OVERDENTURE RESTORATION

CONICAL PLATFORM

P5C BALL ATTACHMENT ABUTMENT WITH CONICAL PLATFORM

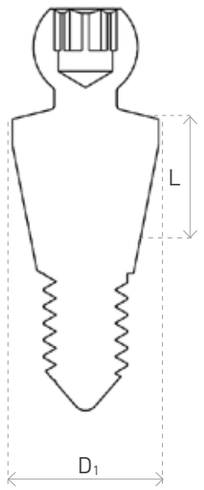

The ball attachment serves to connect a removable denture to an implant

Provided with a stainless steel cap and a silicon cap

Silicon caps are available in three degrees of hardness, 1-3, from the hardest to the softest

The conical connection is shaped to assure sealing closure and absolute implant-abutment fastening

Advanced internal conical connection offers a tight seal and high mechanical strength

P5C Ball attachment abutment with conical platform	P5a Metal cap	P5b Silicon cap	P5d Protective disk
P5C-4, 1	P5a	P5b-1 (hard, grey color)	P5d
P5C-4, 2		P5b-2 (medium, transparent color)	
P5C-4, 3		P5b-3 (soft, pink color)	
P5C-4, 4			
P5C-4, 5			
P5C-4, 6			
$D_{1\,(mm)}$ = 4.1 $L_{(mm)}$ = 1, 2, 3, 4, 5, 6	$D_{1\,(mm)}$ =5 $L_{(mm)}$ = 3.2	$D_{1\,(mm)}$ =4 $L_{(mm)}$ = 2.5	

P5C attachment includes metal and silicon caps

NARROW PLATFORM

Designed for implants with a diameter of 3mm and 3.2mm

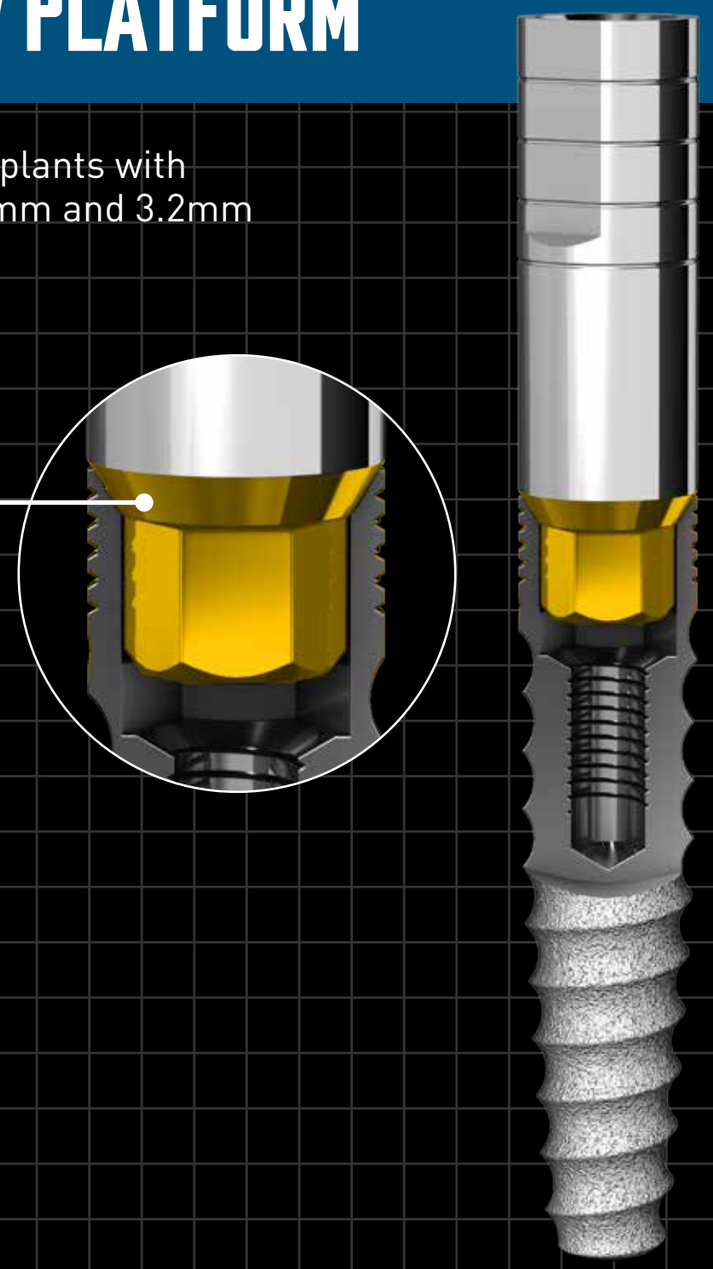

NARROW PLATFORM

The order and presentation of these products is based on impressions taken from an implant.
There is also an option to take an impression after connecting the abutment to the implant.

	Healing caps	Impressions	Abutments					Lab Products
			Custom				Individual	
			Temporary	Straight		Angular		
Cement-Retained Restoration		D1-3 Page 115	P3S-PEEK-3 Page 118	P3-3 Page 119 P3W-3 Page 119 P3S-3 Page 119		P4-3 Page 120 P4L-3 Page 120 P4S-3 Page 120	P2NH-3 Page 121 P2N-3 Page 121	P3-3,Sc Page 122 P3L-3,sc Page 122 P3-3,TIT Page 123 P3-3,TI Page 123 P3H-3,TIT Page 123
Screw-retained Restoration	P0-3 Page 112	D2-3 Page 113 D2O-3 Page 113		P16-3 Page 126 P14b Page 127 P14-bT Page 127 P14-bR Page 127		P14-3 Page 127 P14b Page 127 P14-bT Page 127 P14-bR Page 127		P14,sc Page 122 P14-bTs Page 123 P14-bRs Page 123
Overdenture Restoration		D3-3 Page 114 D3W-3 Page 114		P5-3 Page 130 P25-3 Page 131		P5-3,20 Page 132		

P0 TITANIUM HEALING CAP

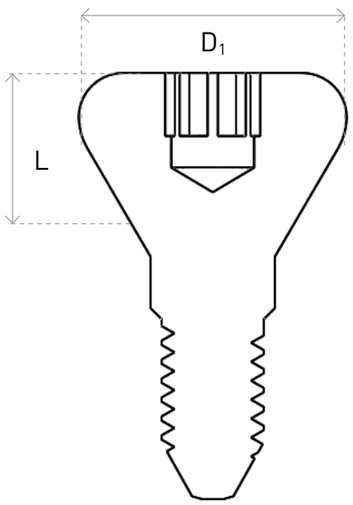

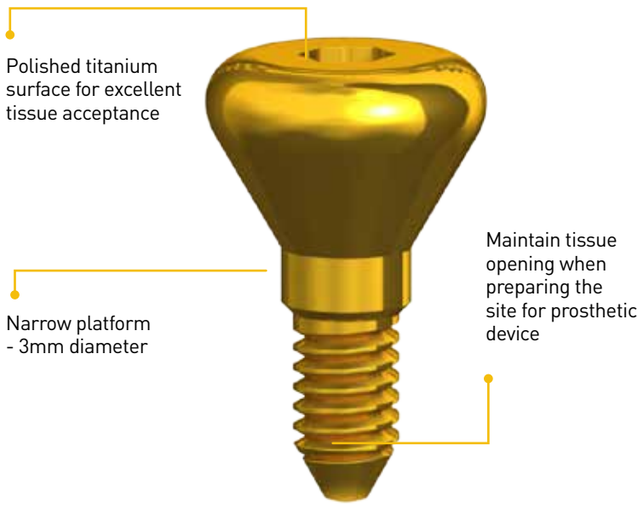

P0 Titanium healing cap
P0-3,2
P0-3,3
P0-3,4
P0-3,5
P0-3,7
$D_{1\,(mm)} = 4$ $L_{(mm)} = 2, 3, 4, 5, 7$

D2 IMPRESSION TRANSFER

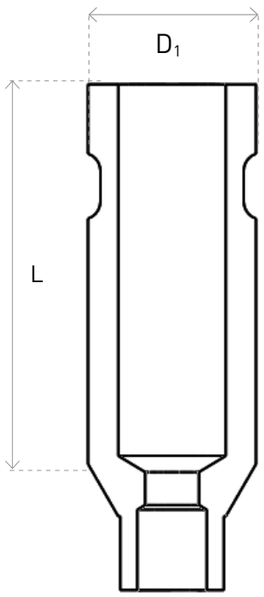

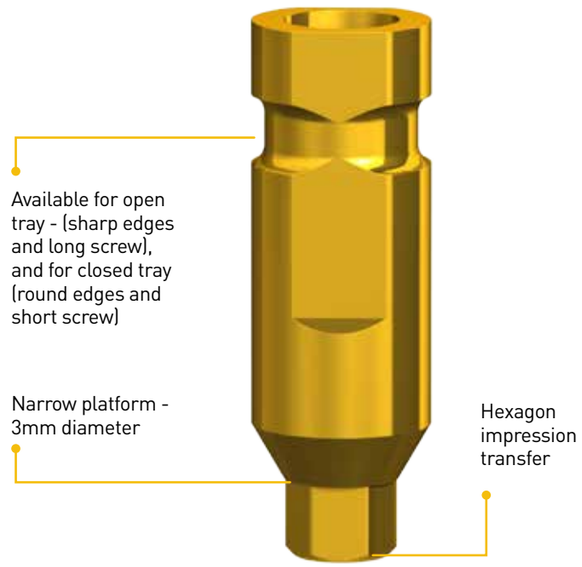

D2 Impression transfer for closed tray	D2O Impression transfer for open tray
D2-3, 9	D2O-3, 15
$D_{1\,(mm)} = 3$ $L_{(mm)} = 9$	$D_{1\,(mm)} = 3$ $L_{(mm)} = 15$

D2 transfers are available with D2a or D2al screws. A short screw for a closed tray and a long screw for an open tray.

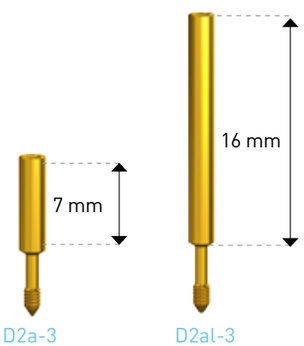

D3 CLIP TRANSFER

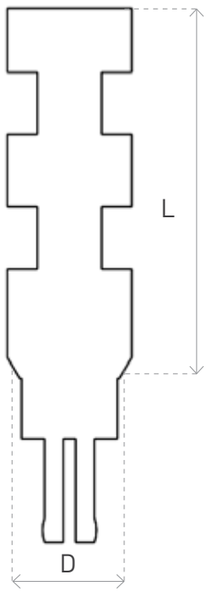

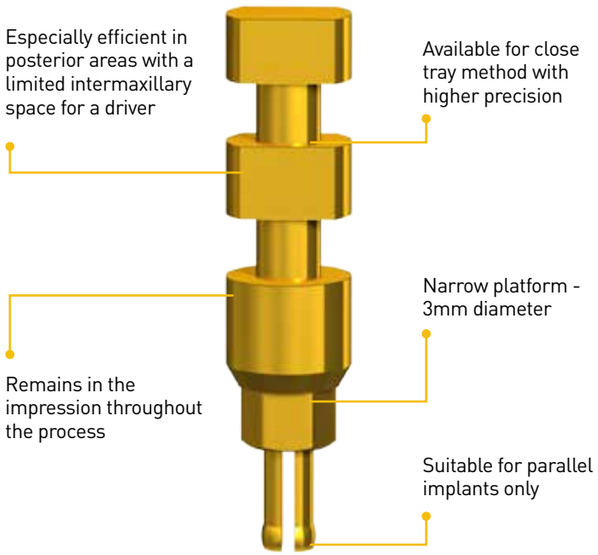

D3 Clip transfer	D3W Wide clip transfer
D3-3,9	D3W-3,9
$D_{1\,(mm)} = 3.5$ $L_{(mm)} = 9$	$D_{1\,(mm)} = 4.5$ $L_{(mm)} = 9$

D1 ANALOG

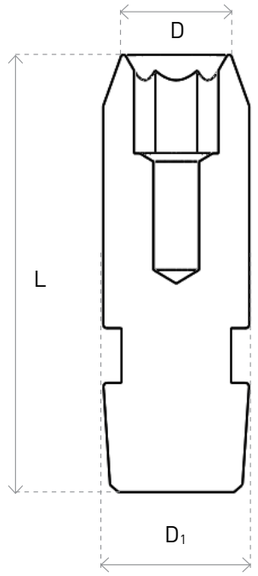

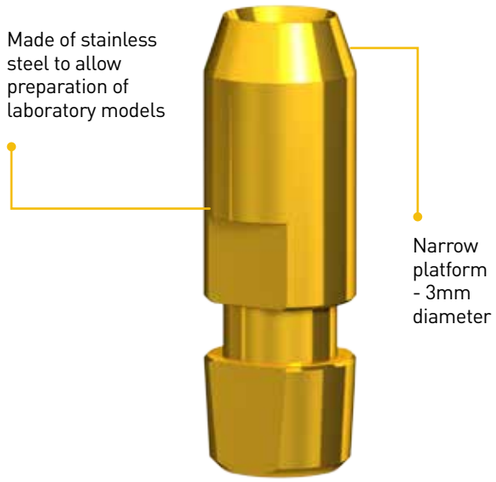

D1 - 3 Analog
D1 - 3
$D_{1\,(mm)} = 4$ $L_{(mm)} = 12$

CEMENT-RETAINED RESTORATION

NARROW PLATFORM

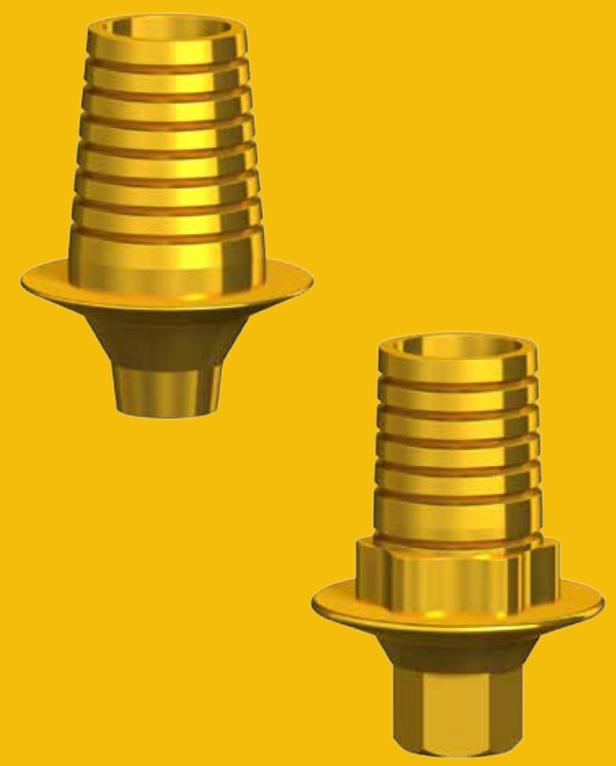

P3S-PEEK TEMPORARY ANATOMIC ANTI-ROTATION ABUTMENT

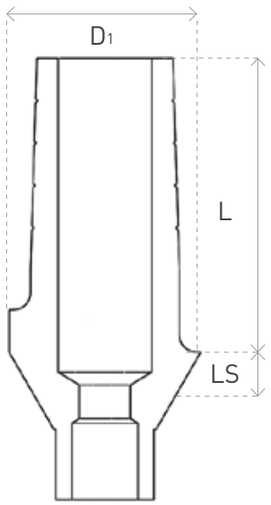

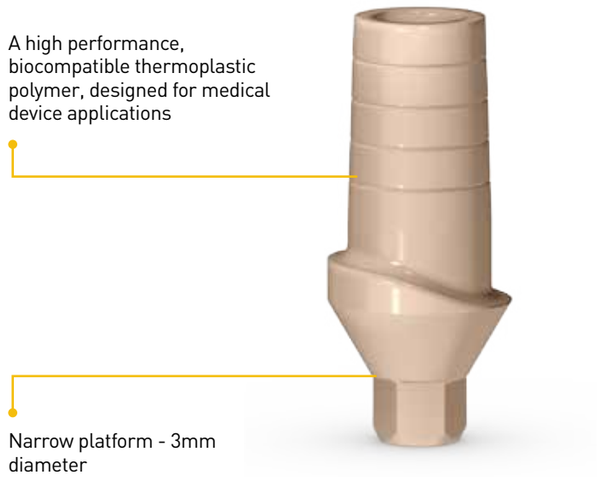

P3S PEEK Temporary peek anatomic anti-rotation abutment
P3S-PEEK-3, 1
P3S-PEEK-3, 2
P3S-PEEK-3, 3
$D_{1\,(mm)}$ = 4.7 $L_{(mm)}$ = 7 $LS_{(mm)}$ = 1, 2, 3

P3a-3

All abutments include a short screw

P3 ANTI-ROTATION ABUTMENT

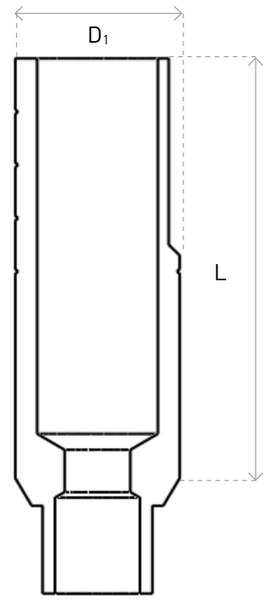

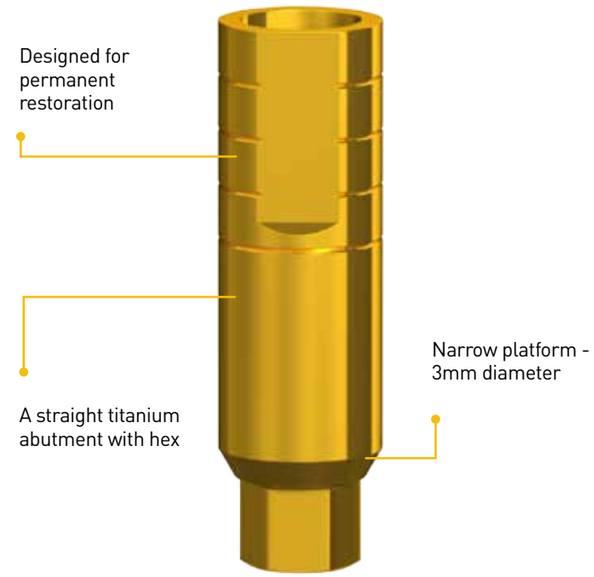

P3 Anti-rotation abutment	P3W Wide anti-rotation abutment	P3S Anatomic anti-rotation abutment
P3-3, 9	P3W-3, 9	P3S-3,1
P3-3, 9	P3W-3, 9	P3S-3,2
P3-3, 9	P3W-3, 9	P3S-3,3
P3-3, 12		
$D_{1\,(mm)}$ = 3 $L_{(mm)}$ = 9, 12	$D_{1\,(mm)}$ = 4 $L_{(mm)}$ = 9	D=3.8 L=7.5 LS=1,2,3

P3a-3

All abutments include a short screw

P4 ANGULAR ABUTMENT

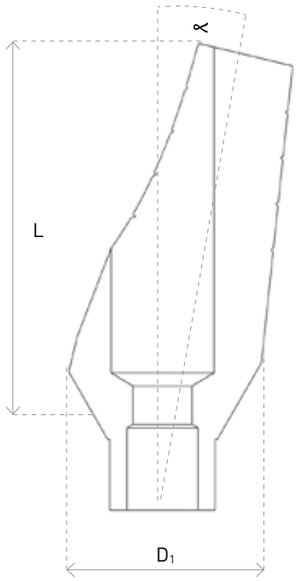

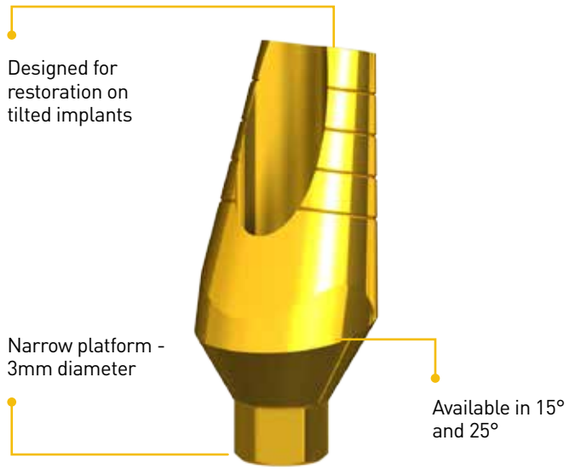

P4 Angular abutment	P4L Long angular abutment	P4S - 15 Anatomic angular abutment 15° with shoulder
P4-3, 15	P4L-3, 15	P4S-3, 15-1
P4-3, 25	P4L-3, 25	P4S-3, 15-2
		P4S-3, 15-3
$D_{1\,(mm)}$ = 4 ∝ 15°, 25° $L_{(mm)}$ = 8	$D_{1\,(mm)}$ = 4 ∝ 15°, 25° $L_{(mm)}$ = 13	$D_{1\,(mm)}$ = ∝ 15° $L_{(mm)}$ = 7 $LS_{(mm)}$ = 1, 2, 3

P3a-3

All abutments include a short screw

P2N PLASTIC SLEEVE

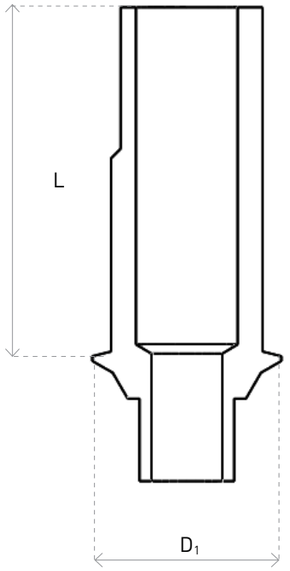

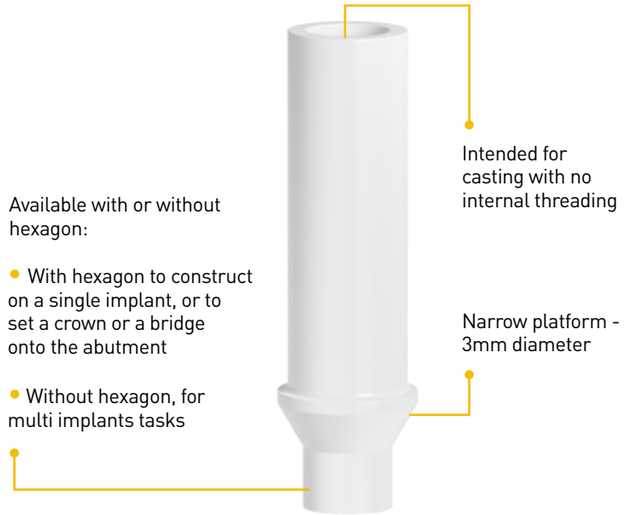

P2N Plastic Sleeve w/Fixation narrow Screw - straight	P2NH Plastic Sleeve w/Fixation narrow Screw - Straight w/Hex
P2N-3, 15	P2NH-3, 15
$D_{1\,(mm)}$ = 4 $L_{(mm)}$ = 7	$D_{1\,(mm)}$ = 4 $L_{(mm)}$ = 7

P3a-3

All abutments include a short screw.

CAD/CAM SCAN ABUTMETS

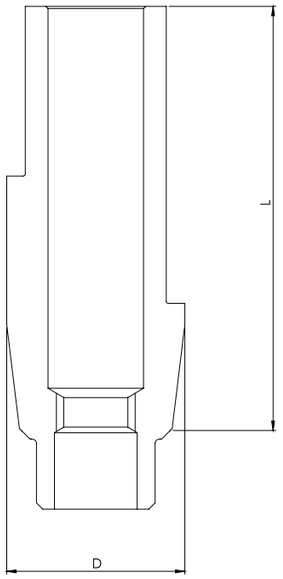

These 3D libraries enable precise computerized planning of the future restoration by scanning the implants and/or abutments of all types

AB Dental products have been added to the libraries of a wide range of companies

The scanning information is used to produce precise restoration on AB implants using CAD/CAM

Also for intra-oral scanning

CAD/CAM technology simplifies the work flow, ensuring accuracy, speed and patient comfort

Made from PEEK - A high performance, biocompatible thermoplastic polymer

P3	P3L	P14
Scanning base for straight abutment	Long Scanning base for straight abutment	Scanning base for angular adaptor
P3-3,sc	P3L-3,sc	P14,sc
D (mm) = 4.5 L (mm) = 4	D (mm) = 3.7 L (mm) = 10	D (mm) = 5.5 L (mm) = 6.1

Scan abutments includes a short screw

P3a-3

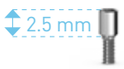

P14a

CAD/CAM TITANIUM BASE

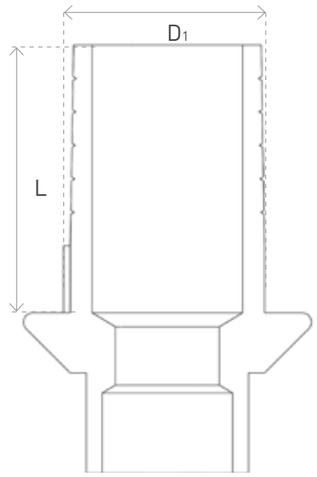

These 3D libraries enable precise computerized planning of the future restoration by scanning the implants and/or abutments of all types

AB Dental products have been added to the libraries of a wide range of companies

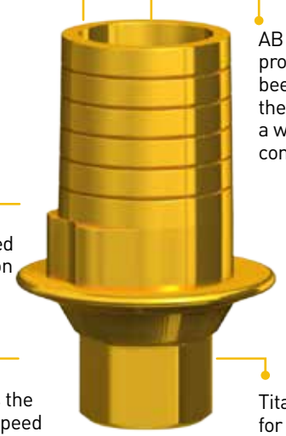

The scanning information is used to produce precise restoration on AB implants using CAD/CAM

CAD/CAM technology simplifies the work flow, ensuring accuracy, speed and patient comfort

Titanium base for cementing crowns and bridges made by CAD/CAM

P3	P14
Straight abutment for gluing position	Titanium/Cobalt chrome short sleeve for angular adaptor
P3-3,TI Slim - suitable for single crown	P14-btS Titanium short sleeve
P3H-3,TIT Suitable for single crown	P14-bRs Cobalt chrome short sleeve
P3-3,TIT Suitable for bridges	
D (mm) = 4.3 L (mm) = 6.4, 6.65	D (mm) = 4.4 L (mm) = 5.5

The relevant data is incorporated in the libraries of the following systems: 3shape, dental wings, exocad

Titanium base includes a short screw

P3a-3

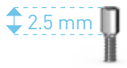

P14a

SCREW-RETAINED RESTORATION

NARROW PLATFORM

P16
STRAIGHT ADAPTOR

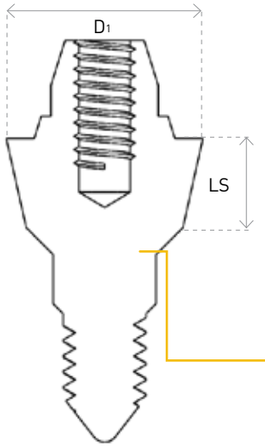

The upper cone solves the lack of parallelism

The impression-taking is performed over the installed adaptors

The new product design allows for a greater space for the gums

The over denture system is screwed to the cone. Available in different heights

Facilitates the installation of an over denture system on nonparallel implants

A straight adaptor made from titanium

Platform switching by design, allowing perfect environment for soft-tissue growth and helps to prevent bone resorption

P16 Straight adaptor	P0-P14 Healing cap for P14	D2-P14 Transfer for P14	D1-P14 Analog for P14	P14b Sleeve for P14
P16-3,1	P0-P14,5	D2-P14	D1-P14	P14-Plastic
P16-3,2	P0-P14,7			P14-bT-Titanium
P16-3,3				P14-bR-Cobalt Chrome
P16-3,4				
$D_{1\,(mm)}$ = 4.5 $LS_{(mm)}$ = 1, 2, 3, 4, 5	$D_{1\,(mm)}$ = 4.5 $L_{(mm)}$ = 5, 7	$D_{1\,(mm)}$ = 4.5 $L_{(mm)}$ =11	$D_{1\,(mm)}$ = 4.5 $L_{(mm)}$ = 12	$D_{1\,(mm)}$ = 4.5 $L_{(mm)}$ = 12

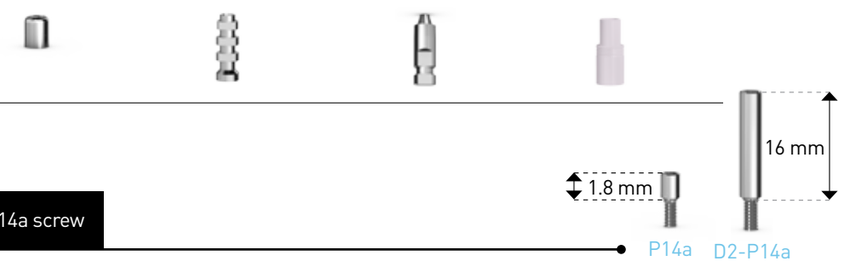

P16 adaptor includes a P14a screw

4 different sleeves for casting are available with this abutment: Plastic, titanium, cobalt chrome or gold

P14
ANGULAR ADAPTOR

ISSUED PATENT!

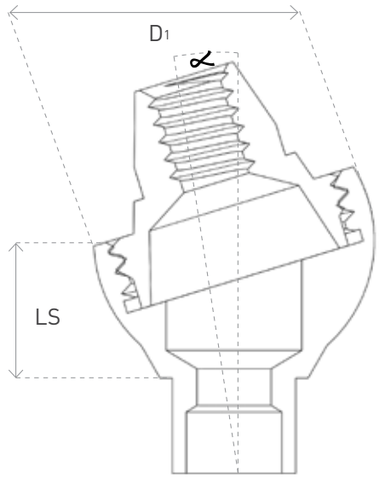

The adaptor (base & cone) enables restoration on non-parallel implants by correcting extreme angles of the implant

Platform switching by design, allowing perfect environment for soft-tissue growth and helps to prevent bone resorption

Issued Patent by AB Dental

The angle of the implant is corrected by using a base. The cone enables connection of a temporary titanium abutment or permanent abutment made with plastic sleeves for casting

A perfect solution for "All on four" restorations

P14-17 Angular adaptor	P14-30 Angular adaptor	P0-P14 Healin cap for P14	D2-P14 Impression transfer for P14	D1-P14 Analog for P14	P14b Sleeve for P14
P14-3, 17-1	P14-3, 30-1	P0-P14, 2.5	D2-P14	D1-P14	P14-Plastic
P14-3, 17-3	P14-3, 30-3	P0-P14,4			P14-bt-Titanium
		P0-P14, 5			P14-bR-Cobalt Chrome
		P0-P14, 7			
$D_{1\,(mm)}$ = 4 $\propto 17^0$ $LS_{(mm)}$ = 1.5, 3	$D_{1\,(mm)}$ = 4 $\propto 30^0$ $LS_{(mm)}$ = 1, 3	$D_{1\,(mm)}$ = 4 $L_{(mm)}$ =2.5, 4, 5, 7	$D_{1\,(mm)}$ = 4 $L_{(mm)}$ =11	$D_{1\,(mm)}$ = 4.4 $L_{(mm)}$ =12	$D_{1\,(mm)}$ = 4 $L_{(mm)}$ = 12

All sleeves include a P14a screw.
P14 adaptor is available with P14a and P14e screws.
P14 adaptor is available with P14f Carrier P14e

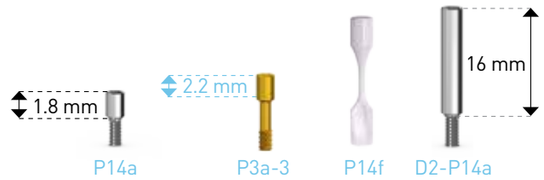

4 different sleeves for casting are available with this abutment: Plastic, titanium, cobalt chrome or gold

OVERDENTURE RESTORATION

NARROW PLATFORM

P5 BALL ATTACHMENT ABUTMENT

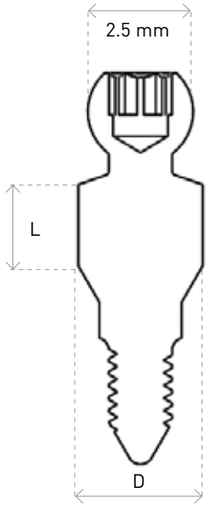

Provided with a stainless steel cap and a silicon cap

The ball attachment serves to connect a removable denture to an implant

Narrow platform - 3mm diameter

Silicon caps are available in three degrees of hardness, 1-3, from the hardest to the softest

P5 Ball attachment abutment with narrow platform	P5a Metal cap	P5b Silicon cap	P5d Protective disk
P5-3, 1	P5a	P5b-1 (hard, grey color)	P5d
P5-3, 2		P5b-2 (medium, transparent color)	
P5-3, 3		P5b-3 (soft, pink color)	
P5-3, 4			
P5-3, 5			
P5-3, 6			
D (mm) = 3 L (mm) = 1, 2, 3, 4, 5, 6	D (mm) =5 L (mm) = 3.2	D (mm) =4 L (mm) = 2.5	

P5-3 P5a P5b

P5 Narrow attachment is also available as a set including metal and silicon caps

P25 AB LOC

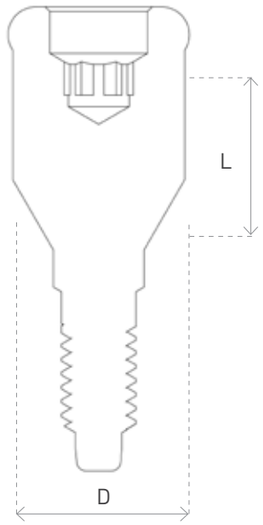

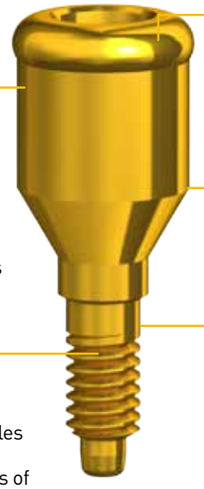

A new innovative extremely wide overdenture attachment system for easy connection between the denture and the implants

Can be assembled with the regular abutment driver

A dual retention that eases the removal and the insertion of the denture

The reduced height enables the dentist to place an overdenture even in cases of reduced interocclusal space

Platform switching by design, allowing perfect environment for soft-tissue growth and helps to prevent bone resorption

P25 AB Loc	P25a Metal cover	P25b Silicon cap	P25d Protective disk
P25-3, 0	P25a	P25-a,b/10 Locator Male Processing Package (Yellow-extra soft, Pink-soft, Purple-strong, Transparent-standard)	P25d
P25-3, 1		P25-a,b/20 Locator Extended Range Male Processing Package (Yellow-extra soft, Pink-soft, Purple-strong, Transparent-standard)	
P25-3, 2			
P25-3, 3			
P25-3, 4			
P25-3, 5			
D_1 (mm) = 3.7 L (mm) = 0.2,1,2,3,4,5	D_1 (mm) = 5.4 L (mm) = 2	D_1 (mm) =4.6 L (mm) =1.7	

P25 P25a P25b

P55 attachment includes metal and silicon caps

P5-20 ANGULAR BALL ATTACHMENT 20°

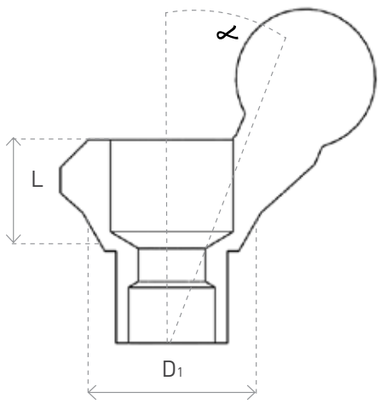

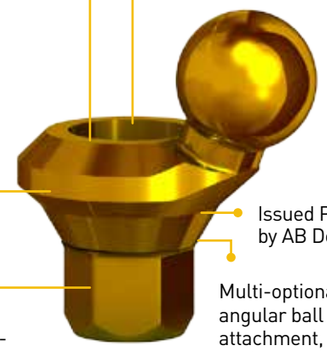

Provides multiple solutions for difficulties in affixing and removing over dentures, side pressures from other teeth/implants, prevents wear of ball attachment

Enables adjustment of the angle at which the implant is positioned

Narrow platform - 3mm diameter

Issued Patent by AB Dental

Multi-optional angular ball attachment, designed to connect a denture on tilted implants

Excellent solution for non-parallel implants, even at extreme angles, for accurate joints on over denture implants

P5-20 Angular Ball attachment 20°	P5a Metal cap	P5b Silicon cap	P5d Protective disk
P5-3, 20-1.5	P5a	P5b-1 (hard, grey color)	P5d
P5-3, 20-3		P5b-2 (medium, transparent color)	
P5-3, 20-4		P5b-3 (soft, pink color)	
P5-3, 20-5			
$D_{1\,(mm)}$ =4 ∝ 20° $L_{(mm)}$ =1.5, 3, 4, 5	$D_{1\,(mm)}$ =5 $L_{(mm)}$ = 3.2	$D_{1\,(mm)}$ =4 $L_{(mm)}$ =2.5	

P5-20 abutments Include a P5-20a screw and a silicon cap
P5-20 attachment is also available as a set including metal and silicon caps

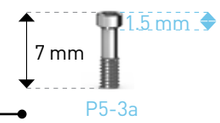

BONE GRAFTS & ACCESSORIES

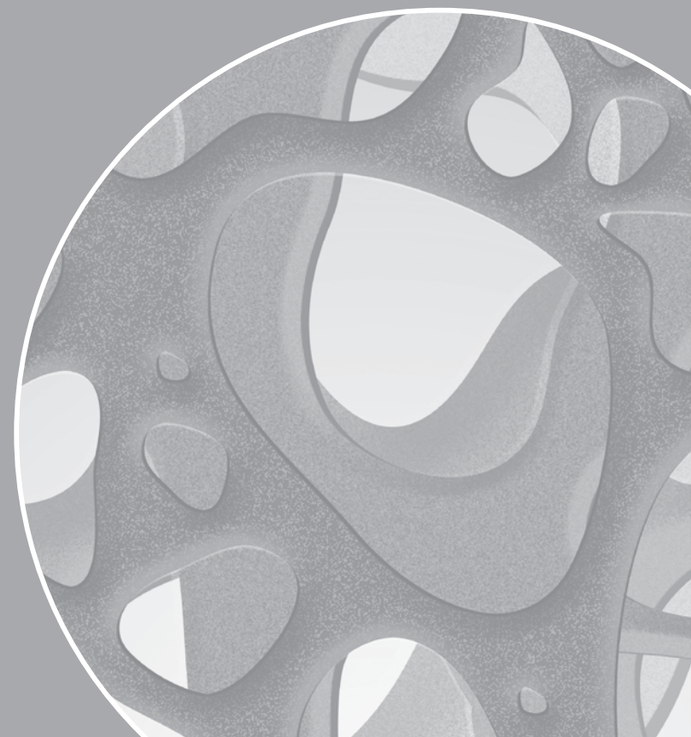

AB BIO MATERIAL BIOFILL-H

Bone Grafts and Tissues from Human Source

CORTIFLEX® – DEMINERALISIERTER CORTICAL SPAN (flexible after Rehydration)

CORTIFLEX® – Demineralized Cortical Strip (flexible after rehydration)

Available sizes:

AB 7545 | Cortical Strut 15 × 30 mm
AB 7546 | Cortical Strut 15 × 60 mm
AB 7547 | Cortical Strut 15 × 120 mm
AB 7548 | Cortical Strut 20 × 25 mm

MINERALIZED CORTICAL GRANULES

Provides a comprehensive solution for temporary
and permanent restoration while retainingmaximum precision

Cat. No.	Description	Size
AB 1001	0.212-0.85 mm	1cc
AB 1003	0.212-0.85 mm	3cc
AB 1005	0.212-0.85 mm	5cc
AB 1101	1-2 mm	1cc
AB 1103	1-2 mm	3cc
AB 1105	1-2 mm	5cc
AB 6001	0.5-1.0 mm	1cc
AB 6003	0.5-1.0 mm	3cc
AB 6005	0.5-1.0 mm	5cc

DEMINERALIZED CORTICAL GRANULES

Bone Graft – has undergone optimized demineralization process. Releases growth factors and enables fast and efficient bone regeneration.

Cat. No.	Description	Size
AB 2001	DBM, 0.212-0.85 mm	1cc
AB 2003	DBM, 0.212-0.85 mm	3cc
AB 2005	DBM, 0.212-0.85 mm	5cc
AB 2101	DBM 1-2 mm	1cc
AB 2103	DBM 1-2 mm	3cc
AB 2105	DBM 1-2 mm	5cc

EPIFLEX®

Matrix of human skin allograft – cell-free. A Gold Standard product for soft tissue supplement in Europe and the United States.

EPIFLEX® HUMAN SKIN, CELL-FREE, FREEZE DRIED

Cat. No.	Description	Size
AB4200	EPIFLEX® Thickness 0.3mm-0.8mm	20x10mm
AB4300	EPIFLEX® Thickness 0.3mm-0.8mm	30x10mm
AB4400	EPIFLEX® Thickness 0.3mm-0.8mm	40x10mm
AB4225	EPIFLEX® Thickness 0.3mm-0.8mm	15x15mm
AB4450	EPIFLEX® Thickness 0.3mm-0.8mm	30x15mm
AB4402	EPIFLEX® Thickness 0.3mm-0.8mm	20x20mm
AB4800	EPIFLEX® Thickness 0.3mm-0.8mm	20x40mm

DBM-DEMINERALIZED BONE MATRIX

READY TO USE NO REHYDRATION OR MIXING

Bone Graft - putty texture. Consists of 93% demineralized bone and 7% Hyaluronic acid. Comes in a variety of volumes.

Cat. No.	Description	Size
AB 3005	DBM PUTTY 0.212-0.85 mm	0.5cc
AB 3010	DBM PUTTY 0.212-0.85 mm	1cc
AB 3025	DBM PUTTY 0.212-0.85 mm	2.5cc

CORTICAL/CANCELLOUS BLOCKS

Human cortical-cancellous bone block. Comes in a variety of sizes.

Cat. No.	Description	Size
AB3745	Thickness 4-5mm j-form	10x10x15mm
AB3765	Thickness 10 mm c-form	15x20mm
AB3601	Cancellous cube	1x1x1cm
AB3609	Cancellous cube	3x1x1cm

AB BIO MATERIAL BIOFILL-B

BOVINE BONE

BIOFILL-B is a natural bovine cancellous bone substitute.
New Gold Standard in Xenograft, CE1023, ISO 13485, FDA certificates.

INDICATIONS
1. Bone regeneration and augmentation
2. Alveolar ridge defect
3. Extraction defect
4. Sinus augmentation
5. Periodontal defect

BIOFILL-B is made from 100% cancellous bone without any cortical portion.
Innovative pulverizing technique allows multiparous structure, maximizing blood vessel ingrowth.
Average **BIOFILL-B** pore size is more than three times of other world leading product.
Osteoconductive surface.
Octacalcium phosphate crystal resulting fast bone formation.
Store at the temperature range 4-30°c.

MANUFACTURING
1. Safety of raw material.
2. BIOFILL-B passed Virus inactivation test, Toxicity test, Biocompatibility test and Gamma sterilization.
3. Manufacturing Technique of Multiporoity.
4. Size of the cancellous bone :0.5-1.2mm 1.2-1.7mm

Cat. No.	Description
BioFill-B-0.5g-l	BioFill-B-0.5g, 1-2 mm Granules
BioFill-B-0.5g-s	BioFill-B-0.5g, 0.5-1 mm Granule
BioFill-B-2g-l	BioFill-B-2g, 1-2 mm Granules
BioFill-B-2g-s	BioFill-B-2g, 0.5-1 mm Granule

AB BIO MATERIAL BIOFILL-S

BONE VOID FILLER

BIOFILL-S is a porous synthetic ceramic, containing 99.9% beta tricalcium phosphate (β-TCP), designed for the filling of bone voids or defects, and is available in several geometries (granules, blocks, cylinders and wedges).

BIOFILL-S macroporosity and porous interconnectivity allows an excellent osteointegration, as well as a total vascularization of the implant with an excellent mechanical resistance.

BIOFILL-S is highly bioactive, stimulating the proliferation and differentiation of osteoblasts, allowing a total replacement by new vital bone during the healing process, within 1-6 months.

Its osteoconductive structure combined with its high hydrophilic promotes the suffusion of biological fluids.

BIOFILL-S is Radiopaque, allowing the perfect monitorization of osteointegration.
Due to his high hydrophilic profile the particles present high cohesivity, conserving the volume of the initial cavity.

INDICATIONS

BIOFILL-S is intended to be used as a bone void filler or augmentation material for bone defects that are not intrinsic to the stability of the bony structure:
1. Sinus floor elevation
2. Alveolar filling or augmentation
3. Alveolar regeneration
4. Filling of extraction cavities
5. Reconstruction of tumor void and cysts defects

Excellent mechanical resistant | Excellent malleability | Excellent bioactivity

Cat. No.	Description
BioFill-S-0.5g-l	BioFill-S-0.5g, 1-2 mm Granules (5 Unit pack)
BioFill-S-0.5g-s	BioFill-S-0.5g, 0.5-1 mm Granules (5 Unit pack)
BioFill-S-1g-l	BioFill-S-1g, 1-2 mm Granules (5 Unit pack)
BioFill-S-1g-s	BioFill-S-1g, 0.5-1 mm Granules (5 Unit pack)

ABPhysio/ ABPhysio-light MOTOR SYSTEM FOR IMPLANTOLOGY

20:1 CONTRA ANGLE

20:1 LED CONTRA ANGLE

New A.B. Dental MD 11 Motor System for Implantology with sophisticated motor control, for smooth and precise power delivery - any speed range.

- Motor speed range of 300 – 40'000 rpm.
- 70 Ncm of maximum torque at 20:1 Contra Angle with graphical, real time torque control on display - (with or without LED - optional) with internal/external cooling system
- Sturdy, high quality finish.
- Integrated pump system for cooling to prevent tissue damage.

New A.B. Dental MD 11 Motor System for Implantology with sophisticated motor control, for smooth and precise power delivery - any speed range.

- Motor speed range of 300 – 40'000 rpm.
- 70 Ncm of maximum torque at 20:1 Contra Angle with graphical, real time torque control on display - (with or without LED - optional) with internal/external cooling system
- Sturdy, high quality finish.
- Integrated pump system for cooling to prevent tissue damage.

The new A.B. Dental MD 11 Motor System, is developed with the intention to put extra smoothness into your hands. electronic motor and sophisticated motor control are key players in this product.
This reflects new design with smooth edges for easy cleaning and a display that gives you all the information at a glance. Single function keys with haptic and audible feedback guarantee for accurate device setup.

Inserting and changing tube sets is carried out effortless by a front access push button and tube compartment. The tube bracket swings out and stays in plain sight while the tube set is positioned between the two notches of the bracket.
A broad variety of extensions and accessories is provided and can be added.

Included in delivery:

- A.B. Dental MD 11 Control Unit
- Electronic Vario Pedal
- Electronic Motor
- Sterile Tube Set, 2 m
- Clip set for tube set mount
- Stand for irrigation fluid
- Handpiece cradle
- User Manual MD 11 in
- 5 languages on CD

2028 AB MD 11, brushless single motor system, 40,000 rpm consists of:

- 1 x Control unit MD 11 (3335) with 1 micromotor socket, irrigation pump on the top surface of the housing, socket for Vario-pedal
- 1 x Contra-angle 20:1 (with or without LED optional) with internal/external cooling system (5052)
- 1 x Electronic motor 21, 40,000 rpm, with cable 2 m, autoclaveable, metal plug (2097)
- 1 x Vario-foot control IP 68 (1866), electronic, suitable for operating theatre
- 1 x Single tubing set (1706), disposable, sterile, 2 m
- 1 x Bottle holder (1770)
- 2 x Spray nozzle attachment for NOU-CLEAN (1942 / 1958)
- 1 x Cooling fluid flask NaCl 0.9 %, 1lt (1696)

TLJ TRANSPARENT LOWER JAWS

Transparent plastic model of the lower jaw, illustrating implants and rehabilitation components.

INDEX

CAT no.	Page
AB 1001	134
AB 1003	134
AB 1005	134
AB 1101	134
AB 1103	134
AB 1105	134
AB 2001	134
AB 2003	134
AB 2005	134
AB 2101	134
AB 2103	134
AB 2105	134
AB 3005	135
AB 3010	135
AB 3025	135
AB 3601	135
AB 3609	135
AB 3745	135
AB 3765	135
AB 4200	135
AB 4225	135
AB 4300	135
AB 4400	135
AB 4402	135
AB 4450	135
AB 4800	135
AB 6001	134
AB 6003	134
AB 6005	134
AB 7545	134
AB 7546	134
AB 7547	134
AB 7548	134
ABPhysio	138
ABPhysio-Light	138
BioFill-B-0.5g-l	136
BioFill-B-0.5g-s	136
BioFill-B-2g-l	136
BioFill-B-2g-s	136
BioFill-S-0.5g-l	137
BioFill-S-0.5g-s	137
BioFill-S-1g-l	137
BioFill-S-1g-s	137
D1-3	115
D1-3.75	70
D1-5	70
D1-6	70
D1-P14	90
D1-P64	92
D1C-4	103
D2-3,9	113
D2-3.75,15	67
D2-3.75,9	67
D2-P12-3.75,15	86
D2-P12-3.75,9	86
D2-P14	90
D2-P64	92
D2C-4,15	101
D2C-4,9	101
D2N-3.75,9	67
D2N-P12-3.75,15	86
D2N-P12-3.75,9	86
D2NO-3.75,15	67
D2O-3,15	113
D2O-3.75,15	67
D2O-3.75,9	67
D3-3,9	114
D3-3.75,15	68
D3-3.75,9	68
D3C-4,15	102
D3C-4,9	102
D3N-3.75,15	68
D3N-3.75,9	68
D3W-3,9	114
D4-3.75,1	69
D4-3.75,2	69
D4-3.75,3	69
D4-3.75,4	69
FS-13	56
FS-19	56
I10-3.75,10	30
I10-3.75,11.5	30
I10-3.75,13	30
I10-3.75,16	30
I10-3.75,8	30
I10-4.2,10	30
I10-4.2,11.5	30
I10-4.2,13	30
I10-4.2,16	30
I10-4.2,8	30
I10-5,10	30
I10-5,11.5	30
I10-5,13	30
I10-5,8	30
I10C-4.2,10	32
I10C-4.2,11.5	32
I10C-4.2,13	32
I10C-4.2,8	32
I2-3.5,10	22
I2-3.5,11.5	22
I2-3.5,13	22
I2-3.5,16	22
I2-3.5,8	22
I2-3.75,10	22
I2-3.75,11.5	22
I2-3.75,13	22
I2-3.75,16	22
I2-3.75,8	22
I2-4.2,10	22
I2-4.2,11.5	22
I2-4.2,13	22
I2-4.2,16	22
I2-4.2,8	22
I2-4.5,10	22
I2-4.5,11.5	22
I2-4.5,13	22
I2-4.5,16	22
I2-4.5,8	22
I2-5,10	22
I2-5,11.5	22
I2-5,13	22
I2-5,16	22
I2-5,8	22
I2-6,8	22
I2-6,10	22
I2-6,11.5	22
I22-3.75,10	24
I22-3.75,11.5	24
I22-3.75,13	24
I22-3.75,16	24
I22-3.75,8	24
I22-4.2,10	24
I22-4.2,11.5	24
I22-4.2,13	24
I22-4.2,16	24
I22-4.2,8	24
I22-5,8	24
I22-5,10	24
I22-5,11.5	24
I5-3,10	26
I5-3,11.5	26
I5-3,13	26
I5-3,16	26
I5-3.2,10	26
I5-3.2,11.5	26
I5-3.2,13	26
I5-3.2,16	26
I5-3.3,10	26
I5-3.3,11.5	26
I5-3.3,13	26
I5-3.3,16	26
I5-3.5,10	26
I5-3.5,11.5	26
I5-3.5,13	26
I5-3.5,16	26
I5-3.75,10	26
I5-3.75,11.5	26
I5-3.75,13	26
I5-3.75,16	26
I5-3.75,8	26
I5-4.2,10	26
I5-4.2,11.5	26
I5-4.2,13	26
I5-4.2,16	26
I5-4.2,8	26
I5-4.5,10	26
I5-4.5,11.5	26
I5-4.5,13	26
I5-4.5,16	26
I5-4.5,6	26
I5-4.5,8	26
I5-5,10	26
I5-5,11.5	26
I5-5,13	26
I5-5,16	26
I5-5,6	26
I5-5,8	26
I5-6,10	26
I5-6,11.5	26
I5-6,13	26
I5-6,16	26
I5-6,6	26
I5-6,8	26
I55-3,10	28
I55-3,11.5	28
I55-3,13	28
I55-3,16	28
I55-3.3,10	28
I55-3.3,11.5	28
I55-3.3,13	28

INDEX

CAT no.	Page
I55-3.3,16	28
I55-3.75,10	28
I55-3.75,11.5	28
I55-3.75,13	28
I55-3.75,16	28
I55-3.75,8	28
I55-4.2,10	28
I55-4.2,11.5	28
I55-4.2,13	28
I55-4.2,16	28
I55-4.2,8	28
I55-4.5,10	28
I55-4.5,11.5	28
I55-4.5,13	28
I55-4.5,16	28
I55-4.5,6	28
I55-4.5,8	28
I55-5,10	28
I55-5,11.5	28
I55-5,13	28
I55-5,16	28
I55-5,6	28
I55-5,8	28
I6-2.4,11.5	34
I6-2.4,13	34
I6-2.4,16	34
I6-3,10	34
I6-3,11.5	34
I6-3,13	34
I6-3,16	34
I6-3.2,10	34
I6-3.2,11.5	34
I6-3.2,13	34
I6-3.2,16	34
I6b-2.4,11.5	36
I6b-2.4,13	36
I6b-2.4,16	36
I7-3.75,10	38
I7-3.75,11.5	38
I7-3.75,13	38
I7-3.75,16	38
I7-3.75,8	38
I7-4.2,10	38
I7-4.2,11.5	38
I7-4.2,13	38
I7-4.2,16	38
I7-4.2,6	38
I7-4.2,8	38
I7-5,10	38
I7-5,11.5	38
I7-5,13	38
I7-5,16	38
I7-5,6	38
I7-5,8	38
P0-3,2	112
P0-3,3	112
P0-3,4	112
P0-3,5	112
P0-3,7	112
P0-3.75,0.5	66
P0-3.75,2	66
P0-3.75,3	66
P0-3.75,4	66
P0-3.75,5	66
P0-3.75,6	66
P0-3.75,7	66
P0-P14,2.5	90
P0-P14,4	90
P0-P14,5	90
P0-P14,7	90
P0-P64,5	92
P0C-4,2	100
P0C-4,3	100
P0C-4,4	100
P0C-4,5	100
P0N-3.75,3	66
P0N-3.75,4	66
P0N-3.75,5	66
P0N-3.75,6	66
P0N-3.75,7	66
P0W-3.75,2	66
P0W-3.75,3	66
P0W-3.75,4	66
P0W-3.75,5	66
P0W-3.75,6	66
P2-P3S-3.75,1	81
P2-P3S-3.75,2	81
P2-P3S-3.75,3	81
P2-P4S-3.75,15-1	82
P2-P4S-3.75,15-2	82
P2-P4S-3.75,15-3	82
P2-P4S-3.75,25-1	82
P2-P4S-3.75,25-2	82
P2-P4S-3.75,25-3	82
P2N-3,15	79
P2N-3.75,15	79
P2NH-3,15	79
P2NH-3.75,15	79
P2WH-3.75,9	79
P3-3,12	119
P3-3,9	119
P3-3,TI	123
P3-3,sc	122
P3L-3,sc	122
P3-3.75,11	75
P3-3.75,12	75
P3-3.75,15	75
P3-3.75,5	75
P3-3.75,7	75
P3-3.75,9	75
P3-3,TIT	123
P3-3.75,TI	84
P3-3.75,TIT	84
P3H-3,TIT	123
P3H-3.75,TIT	84
P3-3.75,sc	83
P3L-3.75,sc	83
P3-5,5	75
P3-5,7	75
P3-5,9	75
P3C-4,9	105
P3N-3.75,5	75
P3N-3.75,7	75
P3N-3.75,9	75
P3S-3,1	119
P3S-3,2	119
P3S-3,3	119
P3S-3.75,1	76
P3S-3.75,2	76
P3S-3.75,3	76
P3S-PEEK-3,1	118
P3S-PEEK-3,2	118
P3S-PEEK-3,3	118
P3S-PEEK-3.75,1	72
P3S-PEEK-3.75,2	72
P3S-PEEK-3.75,3	72
P3SW-3.75,1	76
P3SW-3.75,2	76
P3SW-3.75,3	76
P3W-3,9	119
P3W-3.75,12	75
P3W-3.75,9	75
P4-3,15	120
P4-3,25	120
P4-3.75,15	77
P4-3.75,15st	77
P4-3.75,25	77
P4-3.75,25st	77
P4-3.75,35	77
P4-3.75,45	77
P4-5,15	77
P4-5,25	77
P4C-4,15	106
P4C-4,25	106
P4L-3,15	120
P4L-3,25	120
P4L-3.75,15	77
P4L-3.75,25	77
P4N-3.75,15	77
P4S-3,15-1	120
P4S-3,15-2	120
P4S-3,15-3	120
P4S-3.75,15-1	78
P4S-3.75,15-2	78
P4S-3.75,15-3	78
P4S-3.75,25-1	78
P4S-3.75,25-2	78
P4S-3.75,25-3	78
P4S-PEEK,15-1	73
P4S-PEEK,15-2	73
P4S-PEEK,15-3	73
P4S-PEEK,25-1	73
P4S-PEEK,25-2	73
P4S-PEEK,25-3	73
P4SW-3.75,3	78
P5-3,1	130
P5-3,1set	130
P5-3,2	130
P5-3,20-1.5	132
P5-3,20-1.5set	132
P5-3,20-3	132
P5-3,20-3set	132
P5-3,20-4	132
P5-3,20-4set	132
P5-3,20-5	132
P5-3,20-5set	132
P5-3,2set	130
P5-3,3	130
P5-3,3set	130
P5-3,4	130

INDEX

CAT no.	Page
P5-3,4set	130
P5-3,5	130
P5-3,5set	130
P5-3,6	130
P5-3,6set	130
P5-3.75,1	94
P5-3.75,1set	94
P5-3.75,2	94
P5-3.75,20-1	96
P5-3.75,20-1set	96
P5-3.75,20-2	96
P5-3.75,20-2set	96
P5-3.75,20-3	96
P5-3.75,20-3set	96
P5-3.75,20-4	96
P5-3.75,20-4set	96
P5-3.75,20-5	96
P5-3.75,20-5set	96
P5-3.75,20-6	96
P5-3.75,20-6set	96
P5-3.75,2set	94
P5-3.75,3	94
P5-3.75,3set	94
P5-3.75,4	94
P5-3.75,4set	94
P5-3.75,5	94
P5-3.75,5set	94
P5-3.75,6	94
P5-3.75,6set	94
P5-P14,1	91
P5-P14,2	91
P5C-4,1	108
P5C-4,2	108
P5C-4,3	108
P5C-4,4	108
P5C-4,5	108
P5C-4,6	108
P5a	94
P5b-1	94
P5b-2	94
P5b-3	94
P5d	94
P7-3.75,1	88
P7-3.75,2	88
P7-3.75,3	88
P7a-1	88
P7a-2	88
P7a-3	88
P7b	88
P7b-H	88
P9G-3.75,11	80
P9HG-3.75,11	80
P9HR-3.75,11	80
P9R-3.75,11	80
P12-3.75	86
P12-3.75-T	86
P12-3.75-T,L	86
P12C-3.75,3	86
P12C-3.75,5	86
P14,sc	83
P14-3,17-1	127
P14-3,17-3	127
P14-3,30-1	127
P14-3,30-3	127
P14-3.75,17-1	90
P14-3.75,17-3	90
P14-3.75,30-1	90
P14-3.75,30-3	90
P14-bR	91
P14-bRs	91
P14-bT	91
P14-bTs	91
P14b	91
P14base,17-1	91
P14base,17-3	91
P14base,30-1	91
P14base,30-3	91
P16-3,1	126
P16-3,2	126
P16-3,3	126
P16-3,4	126
P16-3.75,1	89
P16-3.75,2	89
P16-3.75,3	89
P16-3.75,4	89
P16-3.75,5	89
P25a	95
P25-a,b/10	95
P25-3,0.5	131
P25-3,1	131
P25-3,2	131
P25-3,3	131
P25-3,4	131
P25-3,5	131
P25-3.75,0.5	95
P25-3.75,1	95
P25-3.75,2	95
P25-3.75,3	95
P25-3.75,4	95
P25-3.75,5	95
P25-P14,1	91
P25-P14,2	91
P64,sc	83
P64-3.75,1	92
P64-3.75,2	92
P64-3.75,3	92
P64-3.75,4	92
P64-3.75,5	92
P64-3.75,17-0.5	92
P64-3.75,17-2	92
P64-3.75,30-0.5	92
P64-3.75,30-2	92
P64-3.75,42-0.5	92
P64-bT	92
P64-bTs	92
P64-bRs	92
P64b	92
PK-3.75,1	74
PK-3.75,2	74
PK-3.75,3	74
PK-3.75,4	74
T1-1.2,15	46
T1-1.2,9	46
T10	47
T11	47
T13	47
T15-3	47
T15-3.75	47
T16	47
T17	47
T18-3.75,18	47
T18-3.75,9	47
T2-1.2,15	46
T2-1.2,9	46
T22	47
T3-2,18	46
T3-2,9	46
T3-2.4,18	46
T3-2.4,9	46
T3-I6	46
T3-I6L	46
T3C-4,18	46
T3C-4,9	46
T3G-2,17-R	46
T3G-2,21-Y	56
T3G-2,25-B	56
T3G-2,30-G	56
T3G-2.4,17-R	56
T3G-2.4,21-Y	56
T3G-2.4,25-B	56
T3G-2.4,30-G	56
T4	46
T5-1.2,21	46
T5-1.2,26	46
T5F-2,20	46
T5F-2,25	46
T5F-2.4,20	46
T5F-2.4,25	46
T8	47
T8c-10-40	47
T9	47
TPD-2.0	42
TMD-1.9	42
TD-1.2	42
TD-1.5	42
TD-2.5	42
TD-2.8	42
TD-3.2	42
TD-3.65	42
TD-4.0	42
TD-4.5	42
TD-5.0	42
TD-5.5	42
TDE	42
TPDC-2.0	42
TDC-2.2	43
TDC-2.7	43
TDC-3.3	43
TDC-3.7	43
TDC-4.0	43
TDC-4.5	43
TDC-5.0	43
TDC-5.5	43
TPDD-2.0	43
TDD-2.5	44
TDD-2.8	44
TDD-3.2	44
TDD-3.65	44
TDD-4.0	44
TDCS-3.7-4.2	44

INDEX

CAT no.	Page
TDCS-5-6	45
TDTI-3.0	45
TDTI-4.0	45
TDTI-5.0	45
TDCSt-2.2,10	45
TDCSt-2.2,11.5	54
TDCSt-2.2,13	54
TDCSt-2.2,6	54
TDCSt-2.2,8	54
TDCSt-2.7,10	54
TDCSt-2.7,11.5	54
TDCSt-2.7,13	54
TDCSt-2.7,6	54
TDCSt-2.7,8	54
TDCSt-3.3,10	54
TDCSt-3.3,11.5	54
TDCSt-3.3,13	54
TDCSt-3.3,6	54
TDCSt-3.3,8	54
TDCSt-3.7,10	54
TDCSt-3.7,11.5	54
TDCSt-3.7,13	54
TDCSt-3.7,6	54
TDCSt-3.7,8	54
TDCSt-4.0,10	54
TDCSt-4.0,11.5	54
TDCSt-4.0,13	54
TDCSt-4.0,6	54
TDCSt-4.0,8	54
TDCSt-4.5,10	54
TDCSt-4.5,11.5	54
TDCSt-4.5,13	54
TDCSt-4.5,6	54
TDCSt-4.5,8	54
TDG-2,17	54
TDG-2,21	56
TDG-2,25	56
TDG-2,30	56
TDG-2.5,17	56
TDG-2.5,21	56
TDG-2.5,25	56
TDG-2.5,30	56
TDG-2.8,17	56
TDG-2.8,21	56
TDG-2.8,25	56
TDG-2.8,30	56
TDG-3.2,17	56
TDG-3.2,21	56
TDG-3.2,25	56
TDG-3.2,30	56
TDG-3.65,17	56
TDG-3.65,21	56
TDG-3.65,25	56
TDG-3.65,30	56
TD-T17-4.35	56
TDSt-2,10	56
TDSt-2,11.5	52
TDSt-2,13	52
TDSt-2,6	52
TDSt-2,8	52
TDSt-2.8,10	52
TDSt-2.8,11.5	52
TDSt-2.8,13	52
TDSt-2.8,6	52
TDSt-2.8,8	52
TDSt-3.2,10	52
TDSt-3.2,11.5	52
TDSt-3.2,13	52
TDSt-3.2,6	52
TDSt-3.2,8	52
TDSt-3.65,10	52
TDSt-3.65,11.5	52
TDSt-3.65,13	52
TDSt-3.65,6	52
TDSt-3.65,8	52
TDSt-4,10	52
TDSt-4,11.5	52
TDSt-4,13	52
TDSt-4,6	52
TDSt-4,8	52
TDSt-4.5,10	52
TDSt-4.5,11.5	52
TDSt-4.5,13	52
TDSt-4.5,6	52
TDSt-4.5,8	52
TH-2.0	52
TH-2.5	56
TH-2.8	56
TH-3.2	56
TH-3.65	56
TKAOsteo	56
TKD	59
TKD-Guided	52
TKDC	56
TKM	54
TKM-T8C	50
TKMC	50
TKMC-T8C	51
TKOsteo	51
TKS	59
TKS-T8C	48
TKSC	48
TKSC-T8C	49
TKSinus	49
TLJ	140
TP-1.5,31	57
TP-23	48

TEL 5553-7000 | | www.abdental.com.mx